incite fire

Sigma-XT

Conventional Fire Panel

Extinguishant Control

Operation and Maintenance Manual

Australia Version 3.01 – May 2024

Contents

1. Introduction 4
2. Mounting 5
3. Access Levels 6
   3.1. Access Levels 1 and 2 6
   3.2. Access Level 3 – Slide Switches 6
4. Technical specification 7
5. FDCIE - Control Panel 9
6. Connecting to the circuit board 10
7. SIGMA-CP 11
   7.1. Detection zone wiring 11
   7.2. Sounder circuit wiring 12
   7.3. Connection to remote control terminals (not normally used) 12
   7.4. Aux 24V DC supply 13
   7.5. Connection to relay contacts 13
      7.5.1. Local fire relay 13
      7.5.2. Fire relay 13
      7.5.3. Fault relay (Alarm Module) 13
8. Extinguishant Release Module 14
   8.1. Warning Sign and Status Unit Connection 15
      8.1.1. Adding or Removing Status units 16
   8.2. Alternative Configuration of RS485 Circuit. 16
   8.3. Connection to monitored inputs 17
   8.4. Connection to extinguishant output 17
      8.4.1. Solenoid wiring 17
      8.4.2. Igniting actuator wiring 18
   8.5. Fault relay (Extinguishant Module) 19
   8.6. First stage alarm relay (Extinguishant Module) 19
   8.7. Second stage alarm relay (Extinguishant Module) 19
   8.8. Released relay (Extinguishant Module) 19
   8.9. Aborted relay (Extinguishant Module) 19
   8.10. Extract relay (Extinguishant Module) 19
9. Aerosol Releasing Controller – Optional Module 20
   9.1. Overview 20
   9.2. Actuator connections 21
   9.3. Input connections 21
   9.4. Indications 22
   9.5. End of line monitoring: 22
   9.6. Fault monitoring links: 22
   9.7. Isolate slide switch 23
   9.8. Connection to Thermal Fuse 23
10. Configuring the panel 24
   10.1. Alarm Module 24
   10.2. Alarm Module Codes 24
   10.3. Extinguishant Module 26
      10.3.1. General Settings 26
      10.3.2. Extinguishant Output mode 26
      10.3.3. Configuring the Activation Mode 26
      10.3.4. User Output Mode 26
      10.3.5. Configuring the Activation Zones 27
      10.3.6. Reset Inhibit Time 27
      10.3.7. Pre-Release Delay Time 27
      10.3.8. Extinguishant Release Time 27
      10.3.9. Second stage alarm - Pulsing/Continuous 28

10.3.10. Released Indication ... 28
10.3.11. Delay on manual release ... 28
10.3.12. Pre-Release Delay – Reset/Disable ... 28
10.3.13. Release timer (infinite extinguishant duration) ... 29
10.3.14. R0V Removed on System Reset ... 29
10.3.15. Earth Fault Monitoring – Enable/Disable ... 29
10.3.16. Fault Output – Enable/Disable ... 29
10.3.17. Low Pressure Switch – Normal/Invert ... 29
10.3.18. Release Pressure Switch – Normal/Invert ... 30
10.3.19. Extinguishant output monitoring levels ... 30
11. Panel operation – Access levels 1 and 2 ... 31
11.1. Normal condition ... 31
11.2. Alarm Module – Access level 2 ... 31
11.2.1. Test mode ... 31
11.2.2. Disable zones ... 31
11.2.3. Disable sounder outputs ... 32
11.2.4. Activate delays ... 32
11.3. Extinguishant modules ... 32
11.3.1. Extinguishant System Service Isolate ... 32
11.3.2. Extinguishant modules – Menu Access ... 32
11.3.3. Extinguishant release outputs. ... 32
11.3.4. Manual release ... 33
11.3.5. Disable Stage 1 output ... 34
11.3.6. Disable Stage 2 output ... 34
11.3.7. Disable Released output ... 34
11.3.8. Extract output ... 34
11.3.9. Select Reserve Solenoid Output (Configuration Option) ... 34
11.4. Single zone Fire condition ... 35
11.5. Double zone Fire condition ... 35
11.6. Silence/sound alarms ... 35
11.7. Reset ... 36
11.8. Detection Zone fault ... 36
11.9. Sounder fault ... 36
11.10. Other Faults ... 36
11.11. Lamp test ... 36
11.12. Lock Off condition ... 37
11.13. Released condition ... 37
11.14. Low pressure switch ... 37
11.15. Manual only mode ... 37
11.16. Manual Release ... 37
11.17. Abort input ... 37
12. Internal Controls ... 38
12.1. Fire Alarm Module ... 38
12.1.1. Watchdog reset ... 38
12.1.2. Processor reset ... 38
12.1.3. Write enable switch ... 38
12.2. Extinguishant Module ... 38
12.2.1. Watchdog reset ... 38
12.2.2. Processor reset ... 38
12.2.3. Terminate extinguishant ... 38
12.2.4. Address switch ... 39
13. Watchdog reset switch ... 39
14. Processor reset switch ... 39
15. Internal indications – troubleshooting ... 39
15.1. Indicators – Detection and Alarm Panel ... 39
15.2. Indicators - Extinguishant modules ... 40
16. Power supply ... 40
17. Maintenance ... 42
18. Zone designation label ... 42

19. Commissioning instructions and Record of Configuration 42

1. Introduction

The SIGMA XT, and SIGMA XT-A, conventional fire alarm control panel with Extinguishant Control Unit and Aerosol Agent Controller, is designed to comply with AS7240-2, AS7240-4 Fire Detection and Fire Alarm Systems - Control and Indicating Equipment, and AS1670.5 Special Hazards Systems.

The control equipment is a combined fire alarm control panel and extinguishant system with up to eight detection zones, and up to two extinguishant flooding areas. It has an integral, mains powered battery charger and power supply designed in accordance with the requirements of AS7240-4.

In addition to the requirements of AS7240-2 the control panel has the following facilities:

- *Test condition* to allow the automatic resetting of zones in alarm for testing purposes. AS7240-2 Section 11 option with requirements.
- Delay *of the actioning* of fire alarm devices (sounders) so that an alarm may be verified before a premises is evacuated. AS7240-2 Section 7.11 option with requirements.
- Fire *alarm devices* to enable an audible warning to be sounded throughout a premises upon the detection of a fire condition or the operation of a manual call point. AS7240-2 Section 7.8 option with requirements.
- Voltage free relay contacts for fire and local fire which operate upon fire condition. These are to be used for local control and signalling.

2. Mounting

This product should be installed, commissioned and maintained in accordance with the following:

(i) Local regulations for electrical equipment in buildings

(ii) Codes of practice

(iii) Statutory requirements

(iv) Any instructions specifically advised by the manufacturer

This equipment is designed to be operated from 230V 50Hz mains supplies and is of class 1 construction. As such it **must** be connected to earth conductor in the fixed wiring of the installation and a readily accessible double pole disconnect device which disconnects live and neutral simultaneously shall be incorporated in the fixed wiring.

Failure to ensure that all conductive accessible parts of this equipment are adequately bonded to earth will render the equipment unsafe.

This control panel is designed for indoor use only and at temperatures between -5^{0}C (+/- 3) and +40^{0}C (+/-2) and with a maximum relative humidity of 95%. Standard panels are rated to IP30 and suitable for mounting indoors. IP65 is available if required. A rack mount version is available on special order.

Operation outside of these limits may render the equipment unsafe.

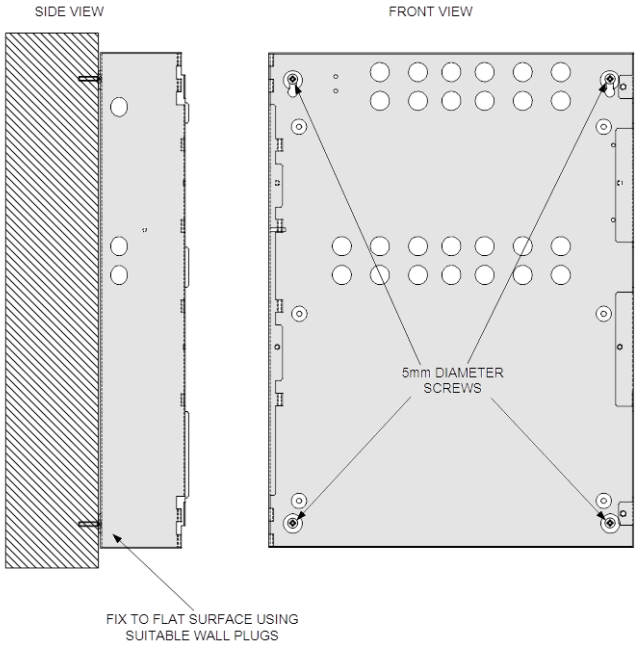

MOUNTING - The control panel should be mounted on a dry, flat surface, at eye height to the display and in a level position such that the enclosure is not distorted.

Suitable fixings of a minimum of 5mm diameter are to be used at all fixing points such that the control panel is securely mounted.

It should be positioned in an accessible position as agreed with the end user. The panel should not be mounted in another enclosure or near sources of excessive heat.

Cables should be connected using cable glands fitted to the knockouts. If additional entry points are required, all swarf and debris caused by drilling of additional cable entries must be cleared before power is applied to the panel.

DIMENSIONS - H x W x D mm

M3 Cabinet : 520 x 385 x 110 **Warning Sign : 195 x 300 x 50** **LCS : 135 x 186 x 50**

3. Access Levels

For more information on Access Levels, please see Section 11 - Panel operation – Access levels 1 and 2.

3.1. Access Levels 1 and 2

Optional cabinet door has 3 locks:

The centre lock opens the display window, allowing for operation of the controls.

The display window contains a door switch. Operation of this door switch places the panel in Access Level 2.

Door Switch in Access Level 1

Door Switch in Access Level 2

The top and bottom locks will open the complete cabinet front allowing for full access to the panel wiring and workings. Opening this door only WILL NOT OPERATE THE DOOR SWITCH and will not allow operation of the controls

3.2. Access Level 3 – Slide Switches

Access Level 3 – Configuration is achieved on each section using "Write Enable" slide switches.

Normal – The Slide Switch is to the Left

To Access Level 3 – move the Slide Switch to the Right

Access Level 3 – The Slide Switch is to the Right

CP Control Panel – Zone Detection Portion. Note: A General Fault will occur if the Slide Switch is in the Access Level 3 position, and the Door Switch is returned to Access Level 1.

XT - Extinguishant Control

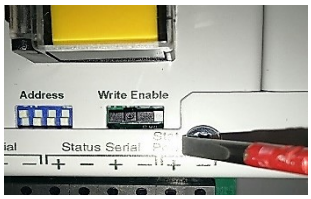

Normal – The Slide Switch is to the Right

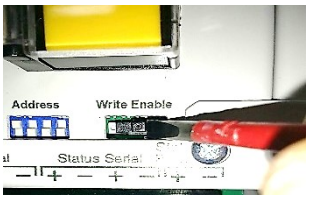

To Access Level 3 – move the Slide Switch to the Left

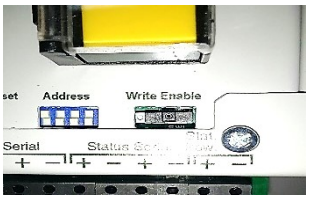

Access Level 3 – The Slide Switch is to the Left

A "CONFIG WP" Fault will occur if the Slide Switch is in the Access Level 3 position, and the Door Switch is returned to Access Level 1.

4. Technical specification

Table 1 – Electrical Specifications

Mains supply	230V AC +10% - 15% (100 Watts maximum)	
Mains supply fuse	1.6Amp (F1.6A L250V)	Replace only with similar type
Power supply rating	3 Amps total including battery charge 28V +/ 2V	
Maximum ripple current	1.5 Volts	
Output voltage	18.5 to 29V DC +/- 2%	
Imax a	400 milliamps	
Imax b	2.3 Amps	
Imin	0.065A	
Battery type (Yuasa NP)	Two 12 Volt sealed lead acid (7Ah maximum)	See Table 2 for capacities
Battery charge voltage	27.6VDC nominal (temperature compensated)	See Table 3
Battery charge current	0.7A maximum	
Battery lead fuse	20mm, 3.15A glass	Replace only with the same type
Battery high impedance warning (Rimax)	1.35 ohms max	
Low battery voltage indication	21V +/- 2%	
Low battery shut off voltage	18.5V +/- 2%	
Max current draw from batteries	3 Amps	With main power disconnected
R0V output	Fused with electronic fuse	
Dedicated sounder outputs	24V Fused at 500mA with electronic fuse	1.6 Amp total load over all circuits
Zonal sounder outputs		
Aux 24V output (detection module)	Fused at 500mA with electronic fuse	200 mA max continuous load 18.5 to 30V DC
Aux 24V output (Extinguishant module)		
First and Second stage Sounder output	18 to 30V DC Fused at 1A with electronic fuse	1.0 Amp total load over all circuits Voltage reversing DC
Fault relay contact rating	30VDC 1A Amp maximum for each	Max ratings not to be exceeded
Fire relay contact rating		
Local fire relay contact rating		
First stage contact rating	5 to 30VDC 1A Amp maximum for each Volt free changeover contact	Max ratings not to be exceeded
Second stage contact rating		
Extract contact rating		
Zone quiescent current	1.6mA maximum	See Table 4 for detector types
Terminal capacity	0.5mm^2 to 2.5mm^2 solid or stranded wire	
Number of detectors per zone	> 20	Dependent on type
Number of sounders per circuit	Dependent on type and current consumption	See Table 6 for sounder types
Detection circuit end of line	6K8 5% ½ Watt resistor	Supplied in terminals
Monitored input end of line	6K8 +/- 5% ½ Watt resistor	
Sounder circuit end of line	10K 5% ¼ Watt resistor	
Extinguishant output end of line	1N4004 Diode	
No. of detection circuits	See Table 2 for each model	Dependent on model
No. of sounder outputs	2 (plus one per zone on T models)	
Extinguishant release output	18 to 30V DC. Fused at 1 Amp	1 A maximum load –for 5 minutes 3 A for 20 milliseconds
Extinguishant release delay	Adjustable 0 to 60 seconds (+/- 10%)	5 second steps
Extinguishant release duration	Adjustable 60 to 300 seconds	5 second steps
SIL, AL, FLT, RST inputs	Switched -ve, max resistance 100 Ohms	
Zone normal threshold	8K ohm TO 1K ohm	
Detector alarm threshold	999 ohms to 400 ohms	
Call point alarm threshold	399 ohms to 100 ohms	
Short circuit threshold	99 ohms to 0 ohms	
Head removal condition	15.5 to 17.5 volts	Zener clamp detector base to be used
Cabling	FP200 or equivalent (maximum capacitance 1uF maximum inductance 1 millihenry)	Metal cable glands must be used
Monitored inputs normal threshold (Allowable EOL)	10K ohm to 2K ohm	
Monitored inputs alarm threshold	2K ohms to 150 ohms +/- 5%	
Monitored inputs Short circuit threshold	140 ohms to 0 ohms +/- 5%	
Status unit/Ancillary board connection	Two wire RS485 (EIA-485 specification)	Max 7 units per area- RS485 cable.
Status unit power output	18 - 30V DC, Fused 500mA with electronic fuse	250 mA max load. Max 3 modules

Table 2 - Standby battery capacity required for fully loaded system

Panel model	24 hrs standby	48 hrs standby	72 hrs standby	Standby current	Max panel alarm current
8 Zones	3.75Ah	5.95Ah	8.2Ah	0.093A	0.63A

Table 3 - Battery charge voltage versus temperature

Temp ^{0}C	Battery charge voltage
0	29.2
10	28.56
20	27.99
30	27.55
40	27.13

Table 4 – Compatible Detectors

Model	Type	Manufacturer	Maximum Number per zone
SLV-AS	OPTICAL	HOCHIKI	40
DCD-A	HEAT	HOCHIKI	40
DCD-C	HEAT	HOCHIKI	35
DFJ-60B	HEAT	HOCHIKI	40
DFJ-90D	HEAT	HOCHIKI	35
DFG-60BLKJ	HEAT	HOCHIKI	40
DRD-AS	FLAME	HOCHIKI	25
SPC-AS	BEAM	HOCHIKI	6

Table 5 – Compatible detector bases and call points

Model	Type	Manufacturer	Comments
YBN-R/4C	PLAIN BASE	HOCHIKI	
YBO-R/4A	LED BASE	HOCHIKI	
YBO-R/6PA	LED BASE	HOCHIKI	
MCP1A-R470SG-P039-01	CALL POINT	KAC	
MCP1A-R470SF-01	CALL POINT	KAC	
MCP1B-R470FF-K013-01	CALL POINT	KAC	SAV-WIRE
STIRPRF01	CALL POINT	STI	

Table 6 – compatible sounders

Model	Type	Manufacturer	Comments
ROSHNI		FULLEON	
SQUASHNI		FULLEON	
SQUASHNI MICRO		FULLEON	

5. FDCIE - Control Panel

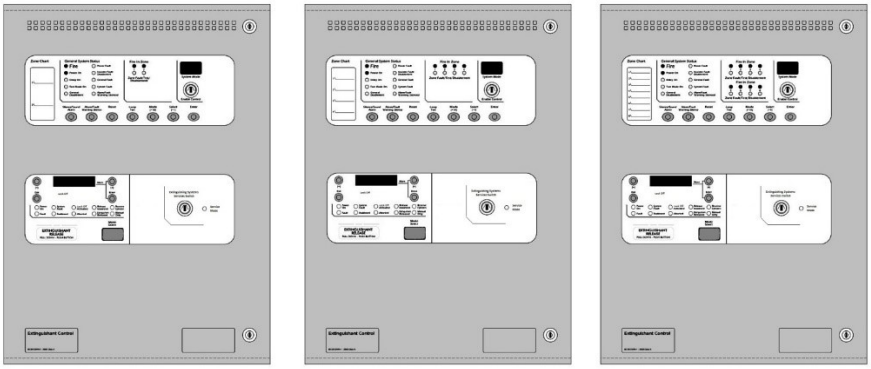

The displays are divided into sections for the Alarm Module and Extinguishant Modules. A standard AS7240-2 control and indicating equipment section with up to eight zones is located in the top aperture of the panel and an AS4214 extinguishant module is fitted in the lower aperture.

In addition to the mandatory controls and indications required by the AS7240-2 standard, two seven- segment LED displays and *Mode*, *Select* and *Enter* buttons are provided to allow easy entry and storage of codes to configure the control panel to suit the requirements of the installation.

Opening the fascia The fascia of the control panel is held in place by a screw on the right hand side.

Opening the fascia allows more room when mounting the cabinet and fitting cables.

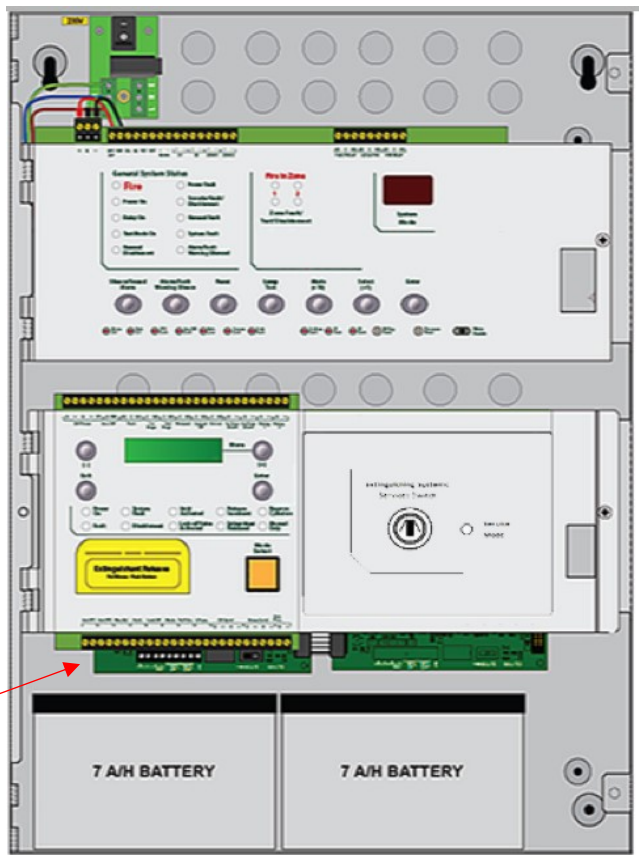

Software revision number

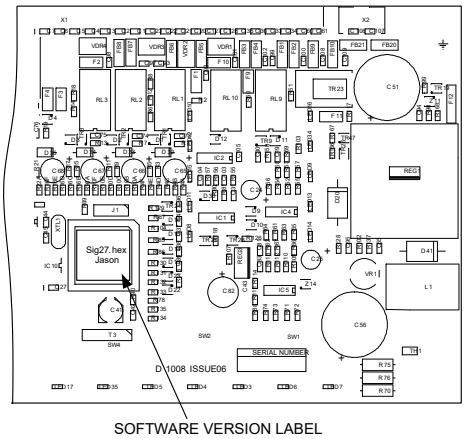

New features may be added to Sigma CP fire control panels from time to time and when this is done the operating software of the unit is updated.

The software revision can be located on the main processor by removing the plate holding the PCB from the enclosure and turning it over.

The software version will have a number such as "216.hex" and it is this number which will determine which features the panel has installed and its compatibility with Sigma CP ancillary board, sounders boards, repeaters etc.

6. Connecting to the circuit board

Cabling must comply with the Australian Standards. The resistance of any cable must not exceed 25 ohms. Terminals are capable of accepting wires of up to 2.5mm^2.

Wiring must not go across the front of the circuit board plate or between the plate and the circuit board.

If cable entries need to be in positions other than at the knockouts provided, wiring must be fed behind and well away from the surface of the circuit board.

The space at the bottom of the enclosure is largely occupied by the batteries so this must be kept in mind when considering cable entries.

7. SIGMA-CP

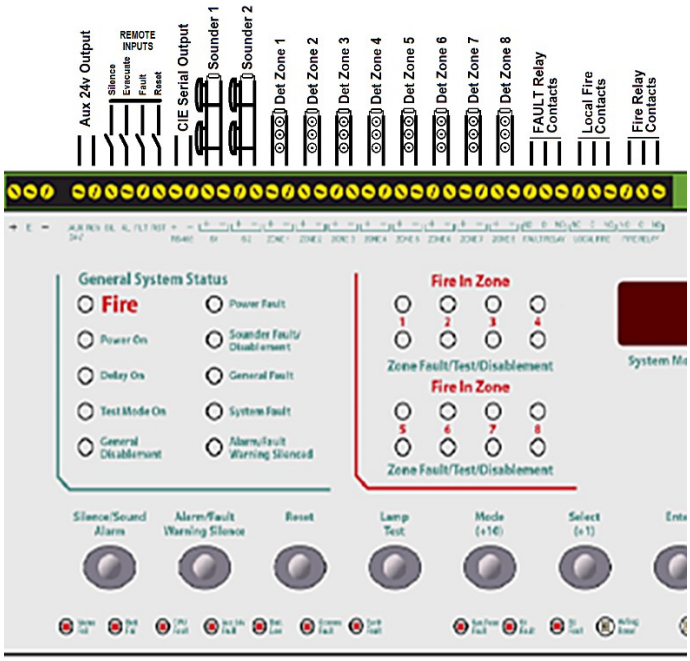

7.1. Detection zone wiring

The detection zones provide a nominal 24V DC to power compatible conventional detectors and call points.

The wiring is monitored for open and short circuit fault conditions. The 6K8 end of line monitoring resistors that are factory fitted to the control panel's terminals must be removed and placed across the last device that is wired to the zone circuit.

Wiring can be conventional using standard detector bases (K series), or by the use of special detector bases it is possible to wire the system such that detection devices and sounders are fitted to the same pair of wires. (T series)

Detection zone circuits must be wired as a single, radial circuit with no spurs or T junctions to enable the monitoring circuit to work correctly.

Polarised sounders may also be wired across the detection zone but in reverse polarity to that shown by the zone terminals (see figure 5 below). Each zone can be configured individually as a 2-wire type zone or a non 2-wire type zone using configuration options C1 to C8.

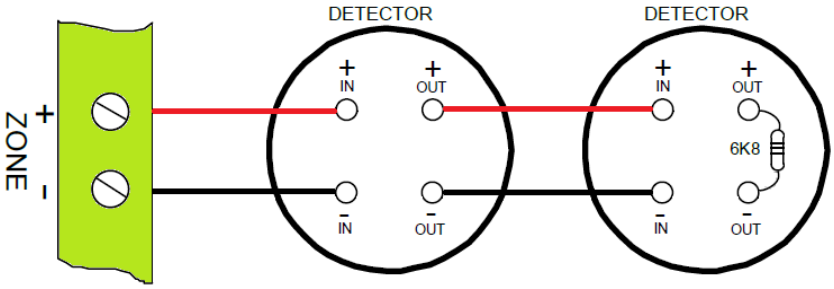

7.2. Sounder circuit wiring

All sounders must be of the polarised type. If non-polarised sounders are used the control panel will permanently show a fault condition.

Sounder circuits are monitored for open and short circuit faults by placing a 10K end of line monitoring resistor across the last device on the circuit.

Sounder circuits must be wired as a single, radial circuit with no spurs or T junctions to enable the monitoring circuit to work correctly. A maximum of 1.6 Amps is available for powering sounders with a maximum load of 0.41 Amps on any one circuit.

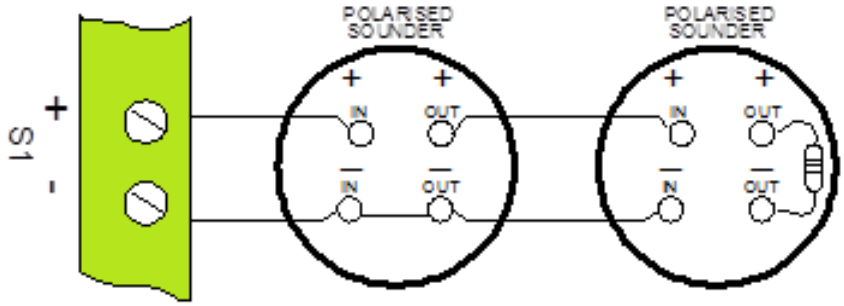

Figure 6. - Sounder circuit wiring

7.3. Connection to remote control terminals (not normally used)

Some functions of the control panel can be controlled externally from the panel if required. Operation of these inputs **must be restricted by an access level 2 control** as defined in AS7240-2. These are abbreviated at the terminals block as follows:

a) Remote 0V supply – R0V
b) Silence Alarm – SIL
c) Sound Alarm – AL
d) Fault – FLT
e) Reset – RST

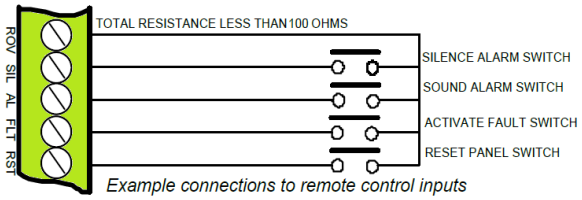

Example connections to remote control inputs

To activate these inputs, the remote 0 Volt (R0V) supply must be connected to the input via a normally open switch or contact and via a resistance of no greater than 100 ohms. All of the remote control inputs are non-latching.

7.4. Aux 24V DC supply

An auxiliary 24V DC supply is provided to enable local signalling or control of ancillary systems such as door release controllers. The terminals for the Aux 24V supply are labelled Aux 24V and ROV. The ROV terminal is the negative terminal and is the same terminal that should be used to switch the remote control terminals.

It is possible to make the ROV terminal pulsing so that by connecting it to the AL terminal via a remote volt-free contact, it can be used to pulse the dedicated sounder circuits in response to a signal from another system for example to give an alert. See programming code 24.

The supply is fitted with an electronic self-resetting fuse to protect the control panel's 24V supply.

Any standing load on the Aux 24V supply must be taken into account when calculating battery standby times as standby time will be significantly affected by even modest standing loads. It is recommended that the Aux24V output is **not** used to power standing loads and not used to supply loads of greater than 500 milliamps.

Where the Aux 24V supply is used to power electromechanical devices such as relays or door retainers it is imperative that a suppression diode is fitted across the coil of the electromechanical device to prevent the generation of high voltage transients back to the control panels power supply.

The Aux 24V DC Supply is not suitable for powering Sigma CP sounder boards or status units.

7.5. Connection to relay contacts

Volt free changeover relay contacts are provided for local control and signalling if required. These contacts are rated for switching signalling circuits only and the maximum ratings listed in Table 1 MUST not be exceeded.

7.5.1. Local fire relay

The *Local Fire Relay* will energise upon activation of a fire condition on any of the zones or pressing of the *Sound Alarm* Button on the front panel. The relay will remain activated until the alarm is silenced or the panel is reset. This relay will not operate upon activation of the remote AL input or when a fire condition is triggered on a zone that is in test mode.

7.5.2. Fire relay

The *Fire Relay* will energise upon activation of a fire condition on any of the zones. The relay will remain activated until the control panel is reset. This relay will *NOT* operate upon activation of the remote AL input. Individual zones can be configured not to operate the Fire relay by setting configuration options E1 to E8.

7.5.3. Fault relay (Alarm Module)

The *Fault Relay* is normally energised and will de-energise upon any fault condition on the detection part or the extinguishant part of the control panel including total loss of power.

8. Extinguishant Release Module

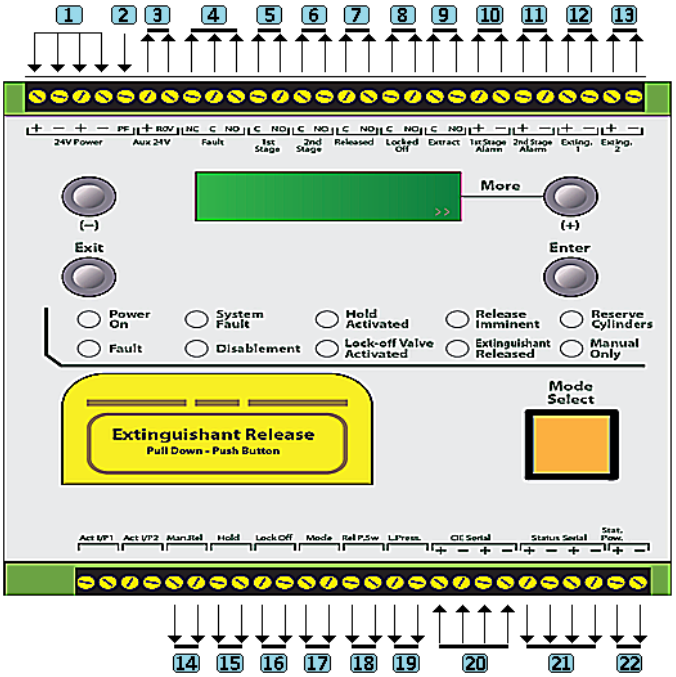

1	24vDC Input from PSU		**12**	** Releasing Solenoid	1N4004 Diode
2	PF Input from PSU		**13**	** Releasing Solenoid	1N4004 Diode
3	Aux 24vDC Output		**14**	Remote Manual Release Switch	**EOL 6K8**
4	Fault relay Contact		**15**	Remote Hold Switch	**EOL 6K8**
5	Stop Air Conditioning		**16**	Remote Abort Switch	**EOL 6K8**
6	Shutdown Power		**17**	Remote Auto/Manual Select Switch	**EOL 6K8**
7	Released Relay Contact		**18**	Exting Release Pressure Switch	**EOL 6K8**
8	Aborted Relay Contact		**19**	Exting Low Pressure Switch	**EOL 6K8**
9	Extract Fan Power		**20**	Internal Connection from Panel	
10	Ist Stage Sounders	**EOL 10K**	**21**	Serial data to Status Units	
11	2nd Stage Sounders	**EOL 10K**	**22**	Power to Status Units	

** Note output 12 & 13 are unavailable when an Aerosol Releasing Controller is fitted.

8.1. Warning Sign and Status Unit Connection

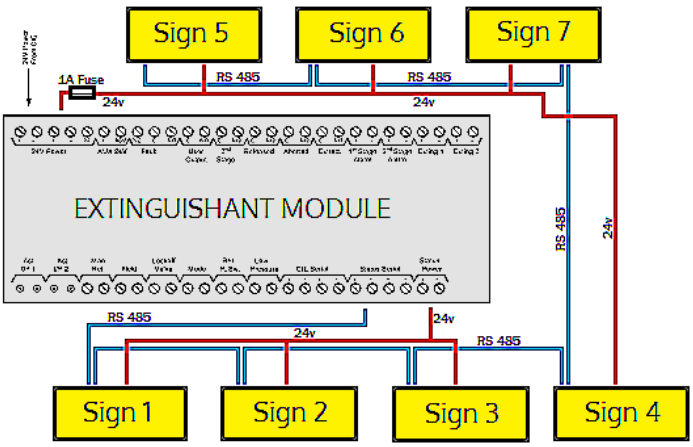

Each Sign requires BOTH 24v POWER and RS485 connections as shown. MAXIMUM devices 7.

Individual addresses required for each Sign. The address switch is located on the bottom left hand corner of the status unit. The address is only read when the boards are first powered, so address switches should not be altered on a system that has power applied, as changes will not be recognised.

ADDRESS	1	2	3	4	5	6	7
VERTICAL SWITCH POSITIONS							
Horizontal Switch Positions							

Units of the with the same address will cause intermittent faults to be displayed.

RECOMMENDED CONFIGURATION	BANK 1	BANK 2	BANK 3
FIRE ALARM DO NOT ENTER	Fire Manual Mode Manual Release Disable Released 2nd Stage Alarm Hold Sys Inop	Fire Manual Mode Manual Release Disable Released 2nd Stage Alarm Hold Sys Inop	1 } 2 } Address Block 4 } Not Used Buzz Top Buzz Bottom Steady Top Steady Bottom
FIRE ALARM EVACUATE AREA	Fire Manual Mode Manual Release Disable Released 2nd Stage Alarm Hold Sys Inop	Fire Manual Mode Manual Release Disable Released 2nd Stage Alarm Hold Sys Inop	1 } 2 } Address Block 4 } Not Used Buzz Top Buzz Bottom Steady Top Steady Bottom
SYSTEM INOPERATIVE	Fire Manual Mode Manual Release Disable Released 2nd Stage Alarm Hold Sys Inop	Fire Manual Mode Manual Release Disable Released 2nd Stage Alarm Hold Sys Inop	1 } 2 } Address Block 4 } Not Used Buzz Top Buzz Bottom Steady Top Steady Bottom

8.1.1. Adding or Removing Status units

PANEL SHOULD BE POWERED DOWN before any changes are made to status units. When the system is first powered on, it will search for connected status units connected to extinguishant module. If status units are connected correctly and detected by the control panel, the LCD will display:

X FAULTS
Enter TO VIEW

Open the *Display* Window and Press *Enter* on the module to which the status units are connected. Use the "+" button on the module to view the faults. If status units are detected the LCD will display, X = the address of the status unit found.

STATUS UNIT X
FAULT

To accept the status units found, **slide the WRITE ENABLE switch**, on the module to which the status units or ancillary boards are connected to write mode. The LCD will then display, X= the address of the status unit found.

STATUS UNIT X
Enter TO ACCEPT

Then press the *Enter* button, the selected status unit or ancillary board will be added to the system and the next unit to be added will be displayed. Press the *Enter* button on the extinguishant module until all of the units have been accepted then slide the *Write Enable* switch to enable mode.

All of the status units found module have now been added and disconnection of any of them will be displayed as a fault on the module and on the detection part of the system. If any status units are disconnected, a Lock Off activated indication will also be displayed at the extinguishant module and all ancillary boards or status units that remain connected. With the *Display Window* Closed, the LCD will display:

REMOTE BUS
FAULT

The Status units which are disconnected will have all their indicators flashing. When additional status units are added, these will be shown on the LCD when the system is powered up.

8.2. Alternative Configuration of RS485 Circuit.

The Panel is normally configured for one RS485 cable from the panel. It is possible to have 2 separate cables for the RS485 circuit with the panel effectively in the middle of the circuit rather than at one end.

Where this configuration is required the link LK2 must be removed or positioned over 1 pin only.

PANEL MUST BE POWERED DOWN BEFORE ANY CHANGES TO SIGNS. If process is done with power connected the is a possibility that a short could occur and damage the panel.

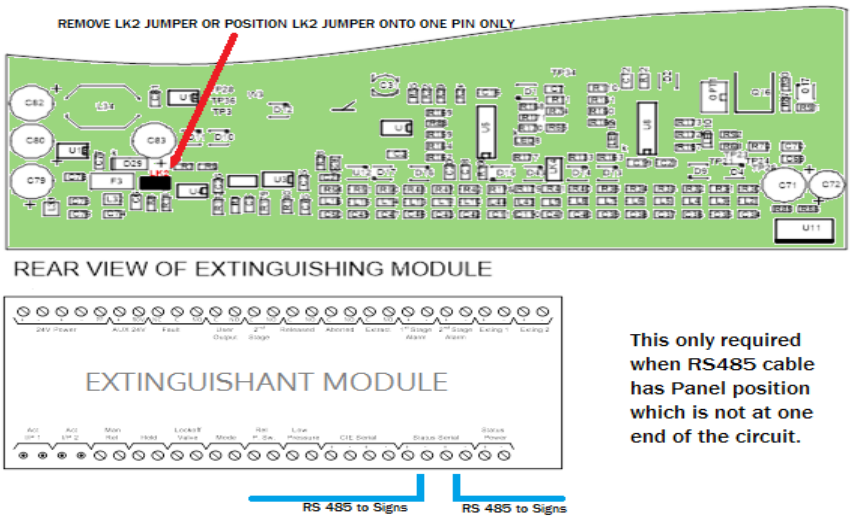

This only required when RS485 cable has Panel position which is not at one end of the circuit.

8.3. Connection to monitored inputs

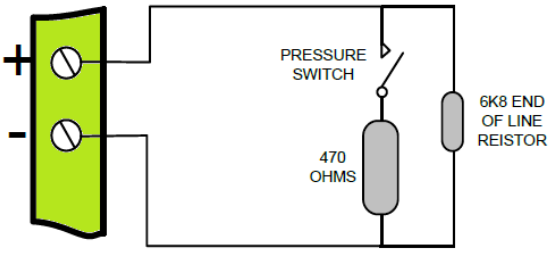

Example of wiring to a monitored input

Monitored inputs (Mode select, manual release, Lock Off, Abort, Released pressure switch and Low pressure switch) have the same characteristics as detection zone inputs and require a 6K8 0.5W end of line monitoring resistor and a nominal, 470 ohm 1 W trigger resistor.

8.4. Connection to extinguishant output

The extinguishant output is capable of supplying up to 1 Amp for the maximum duration to a solenoid or 3 Amps for 20 milliseconds to an igniting actuator or Metron.

The wiring for solenoids and igniting actuators is different as shown below. Igniting actuators of different types or from different manufacturers should not be mixed on the same circuit.

8.4.1. Solenoid wiring

Solenoids must have a resistance of greater than 28 ohms to ensure that the maximum current rating of the extinguishant output is not exceeded. Solenoids should be fitted with a suppression diode to prevent EMF generated by the solenoid when it de-energises from upsetting the operation of the control panel. Only polarised solenoids (i.e. solenoids fitted with an internal polarising diode) should be used.

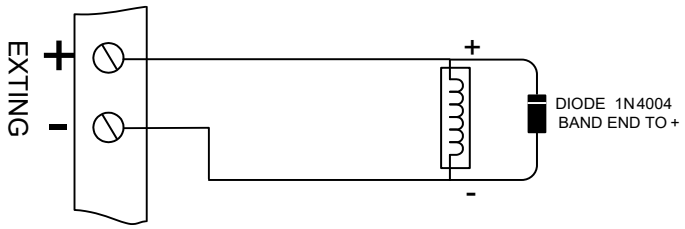

Example of wiring a solenoid

8.4.2. Igniting actuator wiring

A maximum of 3 igniting actuators should be wired in series on a single output. If a circuit has fewer than three actuators, it's crucial to select the appropriate resistor (typically 2R2 or 3R3) to be wired in series to maintain the correct monitoring resistance. Additionally, when igniting actuators are used, the end-of-line diode is no longer required and can be discarded.

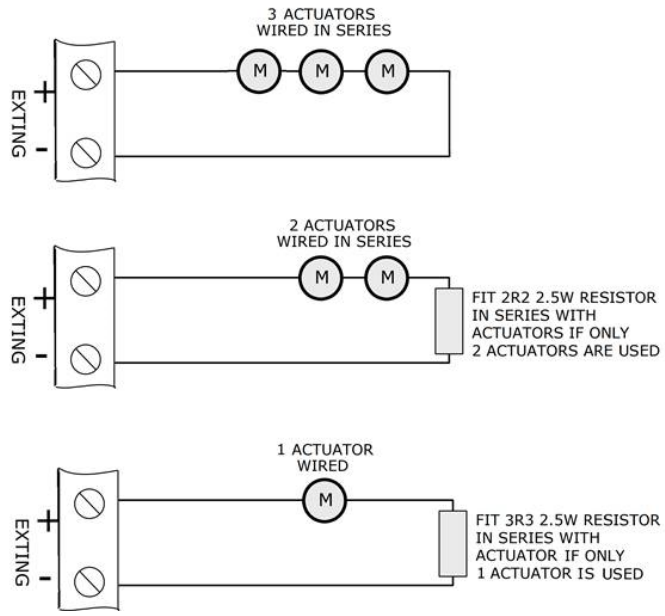

To guarantee firing under all conditions, the total resistance of actuators, monitoring resistor and cable should fall between 4R2 and 7 ohms values outside the range may prevent correct operation.

Alternative actuator wiring using the optional 6-way Agent Termination card

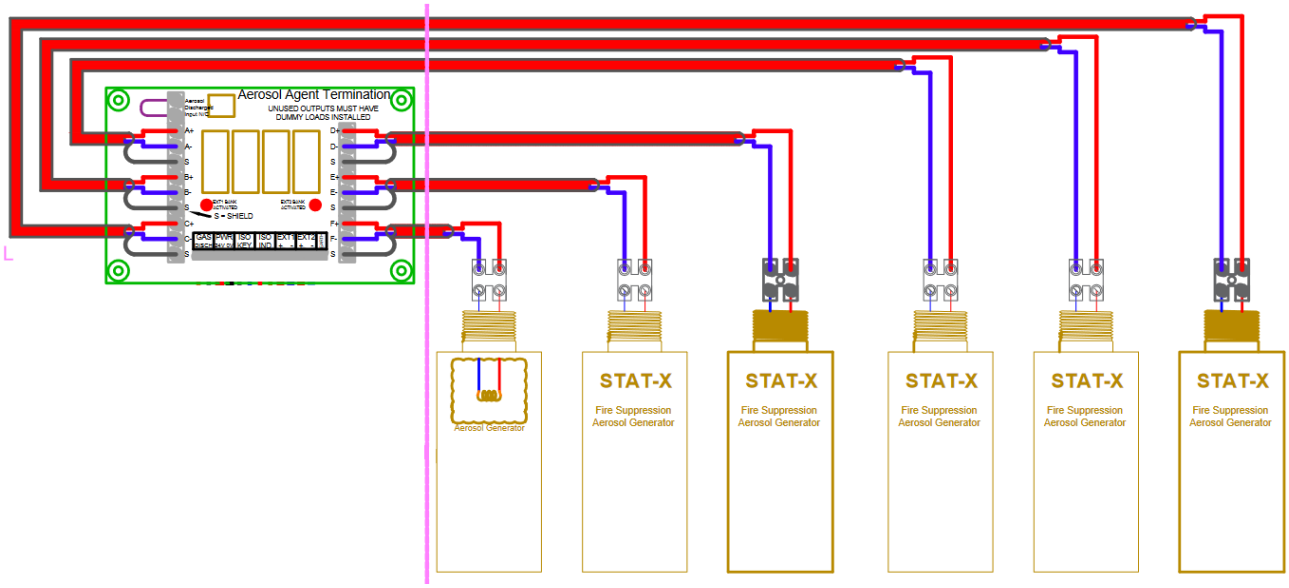

When employing either igniting actuators or aerosol-style units, and if the "Aerosol Releasing Controller" is unnecessary, the termination card can streamline the configuration wiring. Please note that a maximum total of 6 igniting actuators or aerosol units can be connected in this configuration.

8.5. Fault relay (Extinguishant Module)

These fault relays are normally energised and will de-energise upon any fault condition on the extinguishant module or total loss of power. These relays provide individual fault outputs.

8.6. First stage alarm relay (Extinguishant Module)

The *First Stage Alarm Relay* will operate upon activation of a zone that has been configured to contribute to the extinguishant release and will de-activate only when the panel has been reset.

This relay will also operate upon activation of the panel mounted or a remote manual release switch. The stage 1 relay output can be disabled at access level 2 via the menus on the Sigma XT module.

8.7. Second stage alarm relay (Extinguishant Module)

The *Second Stage Alarm Relay* will operate when the panel is in the activated condition (i.e. the release countdown timer has started) and will de-activate only when the panel has been reset from the released condition.

The stage 2 relay output can be disabled at access level 2 via the menus on the Sigma XT module.

8.8. Released relay (Extinguishant Module)

The *Released Relay* on the extinguishant module will operate when the module is in the released condition.

The Released output can be disabled at access level 2 via the menus on the Sigma XT module.

8.9. Aborted relay (Extinguishant Module)

The *Aborted Relay* will operate when the panel is in the aborted condition via an abort switch input.

8.10. Extract relay (Extinguishant Module)

This provides a means to vent a room of extinguishant gases but prevents the gases from being vented during a discharge. To switch on *Extract Relay*, pen the *display window* press *Enter* .
The LCD will show:

TURN ON
EXTRACT OUTPUT

Press "-" until the LCD shows:

TURN OFF
EXTRACT OUTPUT

Press *Enter* to turn ON the *Extract* output and the LCD will show:

9. Aerosol Releasing Controller – Optional Module

9.1. Overview

Aerosol Releasing Controller enables connection of actuator devices. Multiple boards can be connected together to provide control and supervision of up to 40 igniting actuator devices from a single extinguishing control panel circuit.

Where multiple boards are connected, the system comprises one Master board connected to up to 4 Slave boards. Releasing Controller provide "Activated" and "Fault" indications. A master "Isolate" control with indication of the isolated status is also available Master display boards.

All outputs can be isolated such that the system can be tested by observing the "Activated" and "Fault" indications with no danger of operating the igniting actuators. Isolation can be performed via the slide switch mounted on the Master Aerosol Releasing Controller board, or a keyswitch mounted to the panel. On activation from the control panel, the outputs on each controller operate sequentially such that only one pair of actuator outputs are operated at a time in sequence.

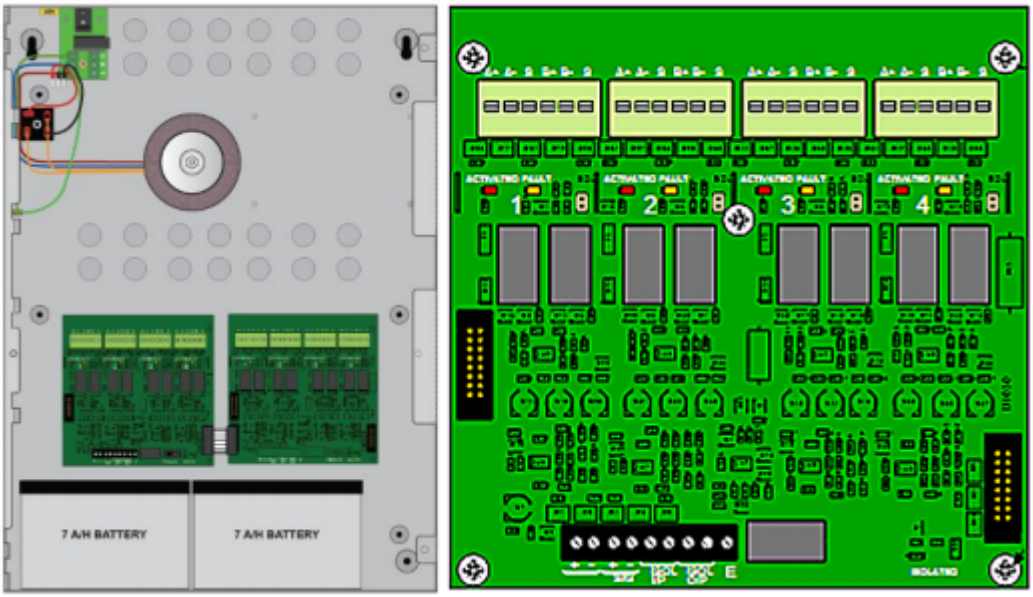

Quick disconnect terminals are provided in 4 groups of 6 for the connection of actuator devices. To connect the wiring push on the white button on top of the terminal block and insert wire into the aperture making sure that the wire is pushed to the full depth of the aperture. A firm tug on the wire will confirm that it is seated correctly.

9.2. Actuator connections

Actuator connections Quick disconnect terminals are provided in 4 groups of 6 for the connection of igniting actuator devices as follows:

A+ = ACUATOR 1+	A+ = ACTUATOR 2+
A- = ACTUATOR 1-	A- = ACTUATOR 2-
S = ACTUATOR 1 screen	S = ACTUATOR 2 screen

To connect the wiring push on the white button on top of the terminal block and insert wire into the aperture making sure that the wire is pushed to the full depth of the aperture. A firm tug on the wire will confirm that it is seated correctly

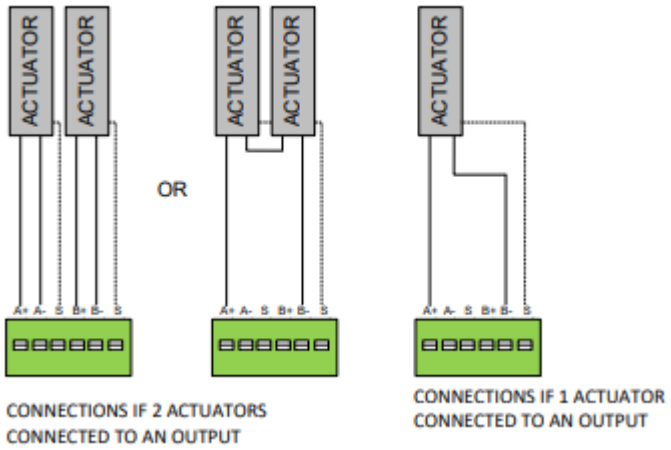

9.3. Input connections

Standard screw terminal connections are provided for connection of the input cables from an extinguishing control panel. These are duplicated to allow the extinguishing circuit to be continued on to other devices if required. A fault will be indicated at the extinguishing control panel if either the trigger input wiring or the 24V power wiring is disconnected from the board.

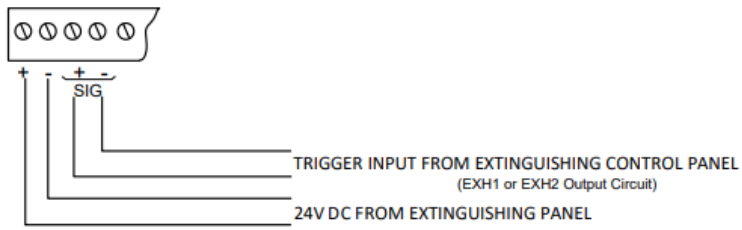

Standard screw terminals are provided for the connection of a remote Isolate switch and indicator. Closing a volt free contact across the ISOL I/P terminals will isolate all outputs.

The Isolated condition can be indicated at a remote location via the ISOL O/P volt free terminals.

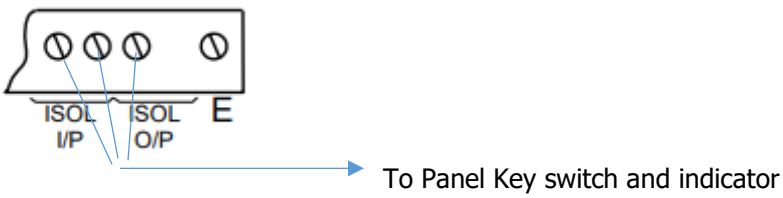

9.4. Indications

Actuator outputs are supervised for circuit faults and a yellow Fault indicator is provided for each of the 4 dual actuator outputs. This indication is extended to the optional display board.

Activation of each of the 4 dual actuator outputs is indicated by a red Activated indicator which will illuminate as soon as the output operates and remain illuminated until the triggering extinguishing signal is removed.

The yellow Fault indicator will illuminate along with the red Activated indicator. This indication is extended to the optional display board. Upon initial power up and after activation Fault LEDs may be illumined for a few seconds while the system stabilises.

A yellow Isolated indicator is provided which will illuminate upon operation of the onboard Isolate slide switch or the front panel mounted Isolate keyswitch or the ISOL input at the terminal block on the Master MSA

9.5. End of line monitoring:

All boards are supplied with jumper links fitted at position LK1 in the bottom right-hand corner of the PCB. This jumper should be removed and placed on one pin of the 2-pin header only on all boards except the last one fitted to the line. If only one board is fitted the jumper can remain in place. This ensures that the ribbon cable connecting multiple boards is supervised for disconnection and a fault is announced at the extinguishing control panel.

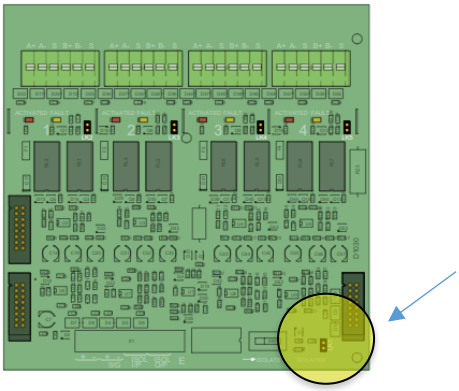

9.6. Fault monitoring links:

All boards are supplied with LK2 to LK5 fitted. These links must be fitted to allow the actuator outputs to be supervised. If any of the actuator outputs are not being used the link associated with that actuator output can be removed and placed on one pin of the 2-pin header only

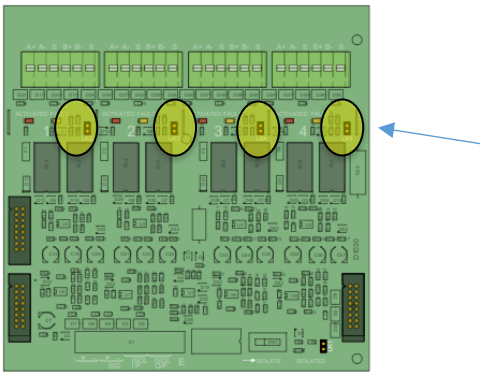

9.7. Isolate slide switch

As well as the front panel keyswitch connected to the screw terminals, The Master board has a slide switch which can be used to isolate all outputs.

Operation of the Isolate switch is accompanied by a yellow LED and allows testing to be performed by activating the control panels releasing output and observing the indicators on the MSA boards illuminating in sequence.

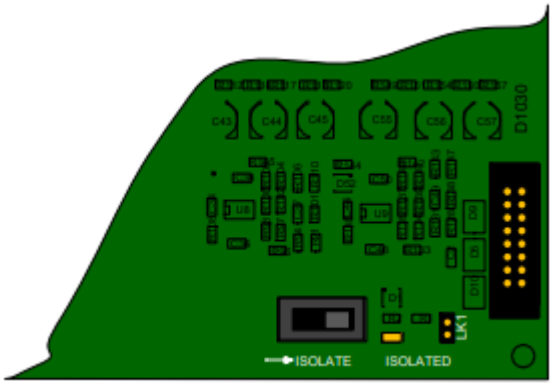

9.8. Connection to Thermal Fuse

When using an aerosol-based suppression agent, activation detection is often reliant on a thermal fuse affixed to the unit. Thermal fuses can come in two configurations: 'normally open,' which shorts on activation, or normal closed,' which opens upon activation. The Sigma XT can be configured to operate with either type, although the 'normally closed' variant is most commonly used.

The thermal fuse enables notification to a control panel upon activation of the aerosol unit. Installation should adhere to the instructions provided in the relevant documentation.

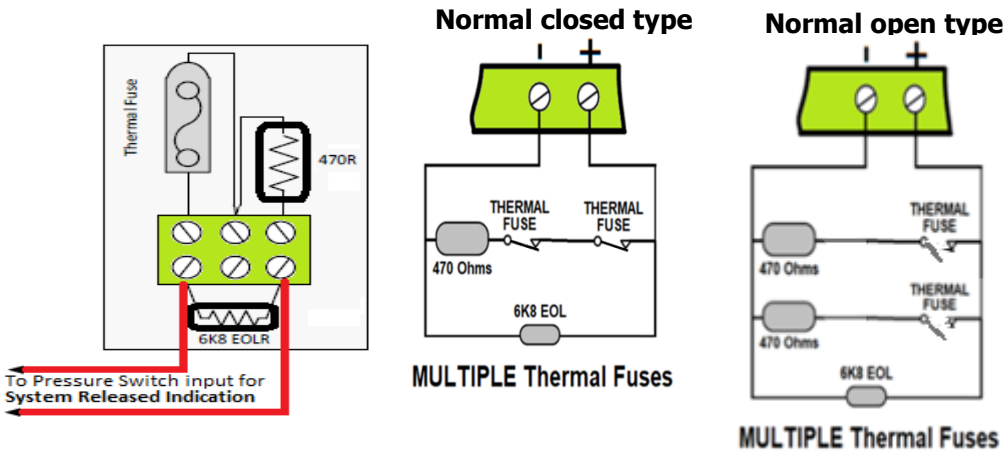

10. Configuring the panel

10.1. Alarm Module

The Alarm Module has 2 or 8 detection zones and has a number of configuration options which can be set at the time of commissioning to suit the requirements of the installation.

The configuration options are only available at access level 3 which is accessed by operating the *Write Enable* switch to the left as shown below. When the panel is at access level 3, the buzzer will "pip" three times every few seconds as an indication that it is at this access level.

Configuration options are simple to *Enter* using the codes the table below. When the control panel is at access level 3, the sub-text of the *Mode* and *Select* buttons is used to *Enter* a number using tens (+10) and units (+1).

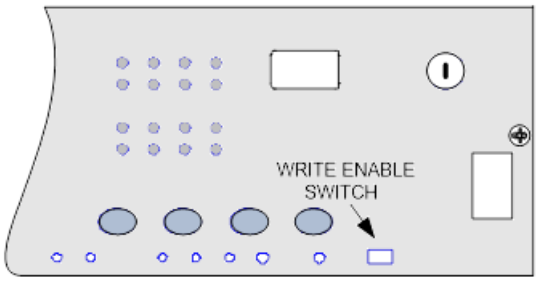

When the required code number is displayed, pressing the *Enter* button will cause the dot on the units seven segment display to flash. This indicates that a configuration option has been set.

To review which configuration options have been set previously, simply scroll through numbers 1 to 99, A1 to A8, C1 to C8 and E1 to E8 and those with a flashing dot indicate which options have been set.

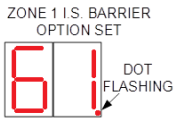

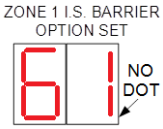

10.2. Alarm Module Codes

CODE	FUNCTION	COMMENTS
00	SOUNDER DELAY TIME = 30 SECONDS	Sets the time delay before sounders operate in combination with configuration codes 31 to 48 and access level 2 function AD.
01	SOUNDER DELAY TIME = 1 MINUTE	
02	SOUNDER DELAY TIME = 2 MINUTES	
03	SOUNDER DELAY TIME = 3 MINUTES	
04	SOUNDER DELAY TIME = 4 MINUTES	
05	SOUNDER DELAY TIME = 5 MINUTES	
06	SOUNDER DELAY TIME = 6 MINUTES	
07	SOUNDER DELAY TIME = 7 MINUTES	
08	SOUNDER DELAY TIME = 8 MINUTES	
09	SOUNDER DELAY TIME = 9 MINUTES	
10	COMMON ALARM MODE (default)	All sounders operate upon any fire condition
11	TWO-STAGE ALARM MODE	Continuous sounders in activated zone, pulsing elsewhere
12	ZONED ALARM MODE	Only sounders connected to zone in alarm operate
21*	DISABLE FIRE BUZZER	Buzzer will not operate on fire condition
22*	DISABLE FAULT OUTPUT	Fault relay will not operate except upon total power failure
23	DISABLE EARTH FAULT MONITORING	Connection of fire alarm wiring will not announce a fault
24	PULSED REMOTE CONTROL OUTPUT	Aux 24V supply pulses 1 sec on/1 sec off
25	ENABLE SOUNDERS ON DETECTION CIRCUITS	Not used
26	DISABLE FIRE OUTPUT	Fire relay will not operate upon any alarm
27	DO NOT CHANGE	DO NOT CHANGE
31	ZONE 1 ALARM FROM DETECTOR DELAYED	Sounder outputs will be delayed by time set at options 0-9 when selected zone(s) triggered by detector only. Note access level 2 function Ad must be set for this to take effect.
32	ZONE 2 ALARM FROM DETECTOR DELAYED	
33	ZONE 3 ALARM FROM DETECTOR DELAYED	
34	ZONE 4 ALARM FROM DETECTOR DELAYED	
35	ZONE 5 ALARM FROM DETECTOR DELAYED	
36	ZONE 6 ALARM FROM DETECTOR DELAYED	
37	ZONE 7 ALARM FROM DETECTOR DELAYED	
38	ZONE 8 ALARM FROM DETECTOR DELAYED	
41	ZONE 1 ALARM FROM CALL POINT DELAYED	Sounder outputs will be delayed by time set at options 0-9 when selected zone(s) triggered by call point only.
42	ZONE 2 ALARM FROM CALL POINT DELAYED	
43	ZONE 3 ALARM FROM CALL POINT DELAYED	

44	ZONE 4 ALARM FROM CALL POINT DELAYED	Note access level 2 function Ad must be set for this to take effect.
45	ZONE 5 ALARM FROM CALL POINT DELAYED	
46	ZONE 6 ALARM FROM CALL POINT DELAYED	
47	ZONE 7 ALARM FROM CALL POINT DELAYED	
48	ZONE 8 ALARM FROM CALL POINT DELAYED	
51	COINCIDENCE ZONE 1	Zone contributes to ancillary board coincidence O/P. Any number of zones can be selected to contribute.
52	COINCIDENCE ZONE 2	
53	COINCIDENCE ZONE 3	
54	COINCIDENCE ZONE 4	
55	COINCIDENCE ZONE 5	
56	COINCIDENCE ZONE 6	
57	COINCIDENCE ZONE 7	
58	COINCIDENCE ZONE 8	
61	CONFIGURE Z1 FOR I.S BARRIER	Detection threshold changed for use with IS barrier
62	CONFIGURE Z2 FOR I.S BARRIER	
63	CONFIGURE Z3 FOR I.S BARRIER	
64	CONFIGURE Z4 FOR I.S BARRIER	
65	CONFIGURE Z5 FOR I.S BARRIER	
66	CONFIGURE Z6 FOR I.S BARRIER	
67	CONFIGURE Z7 FOR I.S BARRIER	
68	CONFIGURE Z8 FOR I.S BARRIER	
71*	ZONE 1 SHORT CIRCUIT INDICATES ALARM	Changes the trigger threshold of the zone so that the control panel can be used on older systems that had no short circuit monitoring. **DOES NOT COMPLY WITH AS7240.2**
72*	ZONE 2 SHORT CIRCUIT INDICATES ALARM	
73*	ZONE 3 SHORT CIRCUIT INDICATES ALARM	
74*	ZONE 4 SHORT CIRCUIT INDICATES ALARM	
75*	ZONE 5 SHORT CIRCUIT INDICATES ALARM	
76*	ZONE 6 SHORT CIRCUIT INDICATES ALARM	
77*	ZONE 7 SHORT CIRCUIT INDICATES ALARM	
78*	ZONE 8 SHORT CIRCUIT INDICATES ALARM	
81*	ZONE 1 NON-LATCHING	Sets the zone to self-resetting so can be used to receive signals from other systems and will reset when input is removed. Note: Can take up to 20 secs for zone to reset If when sounders are operating. **DOES NOT COMPLY WITH AS7240.2**
82*	ZONE 2 NON-LATCHING	
83*	ZONE 3 NON-LATCHING	
84*	ZONE 4 NON-LATCHING	
85*	ZONE 5 NON-LATCHING	
86*	ZONE 6 NON-LATCHING	
87*	ZONE 7 NON-LATCHING	
88*	ZONE 8 NON-LATCHING	
91	ZONE 1 DOES NOT SOUND ALARMS	Prevents the zone from operating the two common sounder outputs.
92	ZONE 2 DOES NOT SOUND ALARMS	
93	ZONE 3 DOES NOT SOUND ALARMS	
94	ZONE 4 DOES NOT SOUND ALARMS	
95	ZONE 5 DOES NOT SOUND ALARMS	
96	ZONE 6 DOES NOT SOUND ALARMS	
97	ZONE 7 DOES NOT SOUND ALARMS	
98	ZONE 8 DOES NOT SOUND ALARMS	
A1*	ZONE 1 ANY ALARM DELAYED	Zone needs to be triggered for 30 secs continuously before an alarm is generated. **DOES NOT COMPLY WITH AS7240.2**
A2*	ZONE 2 ANY ALARM DELAYED	
A3*	ZONE 3 ANY ALARM DELAYED	
A4*	ZONE 4 ANY ALARM DELAYED	
A5*	ZONE 5 ANY ALARM DELAYED	
A6*	ZONE 6 ANY ALARM DELAYED	
A7*	ZONE 7 ANY ALARM DELAYED	
A8*	ZONE 8 ANY ALARM DELAYED	
C1	ZONE 1 SOUNDERS INHIBITED	Not used
C2	ZONE 2 SOUNDERS INHIBITED	
C3	ZONE 3 SOUNDERS INHIBITED	
C4	ZONE 4 SOUNDERS INHIBITED	
C5	ZONE 5 SOUNDERS INHIBITED	
C6	ZONE 6 SOUNDERS INHIBITED	
C7	ZONE 7 SOUNDERS INHIBITED	
C8	ZONE 8 SOUNDERS INHIBITED	
E1*	ZONE 1 WILL NOT OPERATE FIRE RELAY	Enables individual zones to be selected to not operate the fire relay. This is sometimes combined with the non-latching function to prevent ring around on interconnected panels
E2*	ZONE 2 WILL NOT OPERATE FIRE RELAY	
E3*	ZONE 3 WILL NOT OPERATE FIRE RELAY	
E4*	ZONE 4 WILL NOT OPERATE FIRE RELAY	
E5*	ZONE 5 WILL NOT OPERATE FIRE RELAY	
E6*	ZONE 6 WILL NOT OPERATE FIRE RELAY	

E7*	ZONE 7 WILL NOT OPERATE FIRE RELAY	**DOES NOT COMPLY WITH AS7240.2**
E8*	ZONE 8 WILL NOT OPERATE FIRE RELAY	

10.3. Extinguishant Module

10.3.1. General Settings

LINKS - The Sigma XT module contains 3 Links.

LK1 CIE Serial Terminator – This terminates the RS485 comms from the control section

LK2 Status Serial Terminator – This terminates the RS485 comms to the Status units and Warning Signs

LK3 PF Input Inversion – Removing this jumper inverts the PF input so that it must be normally connected to 0V for no fault to be present.

PF INPUT - is used to signal a power failure to the XT Module and id active (power fail mode) when connected to 0V. The function of this input can be inverted by the removal of LK3 on the rear of the board.

LANGUAGE SELECTION - The module is capable of displaying two languages if factory programmed to do so. The first access level 3 option is to select the local language or the default language (English)

10.3.2. Extinguishant Output mode

The Sigma XT module has two extinguishant outputs. These can be configured to operate together at the same time (common) or be configured as main and reserve outputs. The factory default setting is common.

To change, open the *Display Window* and slide the *Write Enable* switch the left. Press the *Enter* button. The LCD will show:

EXTING. O/P MODE
= COMMON

Press the *Enter* button the LCD will show:

Press the Enter button to select main/reserve.

EXTING O/P MODE
MAIN / RESERVE ?

To save, slide the *Write Enable* switch to the right. When the extinguishant module is activated, only extinguishant output 1 will switch on. There will also be an additional menu item at access level 2 to allow the reserve extinguishant output to be selected.

10.3.3. Configuring the Activation Mode

It is possible to configure the extinguishant modules to be activated by coincidence (any 2 zones in a range of zones) or a single zone in a range of zones. The activation mode is factory set to coincidence.

ACTIVATION MODE
= COINCIDENCE

To change, open the *Display Window* and slide the *Write Enable* switch to the left. Press the *Enter* button on the extinguishant module then press the "+" button. The LCD will show:

Press the *Enter* button The LCD will show:

ACTIVATION MODE
= SINGLE

To save, slide the *Write Enable* switch to the right.

10.3.4. User Output Mode

The clean contact User output can be programmed to be activated either when a First Stage Alarm occurs, or the Hold Input is activated. It is usual for this relay to be used as a First Stage Alarm.

USER OUTPUT.
= STAGE 1

To change this, open the *Display Window* and slide the *Write Enable* switch to the left. Press the *Enter* button then press the "+" button.

Press the *Enter* button The LCD will show:

USER OUTPUT.
= HOLD

The OUTPUT is now set to HOLD. If the *Enter* button is pressed again The LCD will show:

USER OUTPUT.
STAGE 1 ?

Press the *Enter* button and the LCD will show. The output is now set to Stage 1

USER OUTPUT.
STAGE 1

To save the settings, slide the *Write Enable* switch gently to the right. Operation of either a STAGE 1 alarm or the HOLD input, as set above, will result in the activation of the User Output relay.

10.3.5. Configuring the Activation Zones

The extinguishant modules are factory set to be activated by coincidence activation.

This means that on an 8 zone, 4 extinguishant area panel for instance, zones 1 and 2 will be set to activate the extinguishant module at address 1, zones 3 and 4 will be set to activate the extinguishant module at address 2 and so on. This can be changed if required so that any zones can activate the extinguishant module.

To change, open the *Display Window* and slide the *Write Enable* switch to the left. Press the *Enter* button on the extinguishant module and then the "+" button until the display shows, X will be the number of the zone selected to be the first activation zone.

FIRST ACTIV.
ZONE = X

FIRST ACTIV.
ZONE = X ?

To change use the "+" and "-" buttons to select the required zone number. When the required zone is displayed, press the *Enter* button. The display will show the first activation zone.

Press the *Enter* button and then the "+" button. The display will then show, X will be the last activation zone.

LAST ACTIV.
ZONE = X

LAST ACTIV.
ZONE = X ?

To change use the "+" and "-" buttons to select the require zone number. When the required zone is displayed, press the *Enter* button.

10.3.6. Reset Inhibit Time

This setting can be used to inhibit the reset of the system after it has been activated until there is a signal representing the end of the discharge (a released input) or for an adjustable time period of up to 30 minutes. The factory default for the reset inhibit time is 0.

RESET INHIBIT
TIME = 0 ?

RESET INHIBIT
TIME = 0

To change, open the *Display Window* and slide the *Write Enable* switch to the left. Press the *Enter* button on the extinguishant module then press the "+" button until the display shows:

Press the *Enter* button and the display shows. To change, press the "+" or "-" buttons until the time required is displayed and then press *Enter*. To save, slide the *Write Enable* switch to the right.

10.3.7. Pre-Release Delay Time

This setting allows for a time delay to be set from activation of the extinguishant module to operation of the extinguishant release output. This time may be between 0 and 30 seconds with a maximum of 5 second steps.

The factory default time delay on the Sigma XT extinguishant modules is 30 seconds.

PRE-REL DELAY
TIME = 30 SEC

To change, open the *Display window* and slide the *Write Enable* switch to the left. Press the *Enter* button on the extinguishant module then press the "+" button until the display shows:

Press the *Enter* button and the display will show. To change, press the "+" or "-" buttons until the time required is displayed and then press *Enter*.

To save, slide the *Write Enable* switch to the right.

PRE-REL DELAY
TIME = 30 ?

10.3.8. Extinguishant Release Time

The time that the extinguishant output is active for can be set between 60 and 300 seconds. The factory default time for this is 60 seconds. It is also possible to disable this timer such that the extinguishant outputs remain active until the module is reset. See Release timer menu option section 10.3.13.

To change the *Extinguishant Release Time*, open the *Display Window* and slide the *Write Enable* switch to the left. Press the *Enter* button then press the "+" button until the display shows:

EXTING. RELEASE
TIME = 60 SEC

Press the *Enter* button and the display will show. To change, press the "+" or "-" buttons until the time required is shown then press *Enter*.

EXTING. RELEASE
TIME = 60 ?

To save, slide the *Write Enable* switch to the right.

10.3.9. Second stage alarm - Pulsing/Continuous

The *Second Stage Alarm Output* can be configured to be steady or pulsing at about 1 second on, 1 second off to suit the desired application. The factory default for the second stage alarm is pulsing.

To change, open the *Display Window* and slide the *Write Enable* switch to the left. Press the *Enter* button on the extinguishant module then press the "+" button until the display shows:

PULSED
ACTIV. ALARMS

To change to steady second stage alarms, press *Enter* . To save, slide the *Write Enable* switch to the right.

STEADY
ACTIV. ALARMS ?

The *Second Stage Alarm Output* will now be steady when the module is activated. **This MUST be set to STEADY when using output for a system Shutdown**

10.3.10. Released Indication

It is possible to select whether the released indication on a module is operated at the same time as the extinguishant release outputs operate or by operation of a pressure switch connected to the released, pressure switch input.

The factory default setting is for the released indication to be operated by operation of a pressure switch connected to the pressure switch input.

RELEASE IND ON
RELEASED INPUT

To change, open the *Display Window* and slide the *Write Enable* switch on the module to be configured gently to the right. Press the *Enter* button on the extinguishant module then press the "+" button until the display shows:

RELEASED IND ON
EXTING. REL ?

To change press *Enter* . To save, slide the *Write Enable* switch to the right.

10.3.11. Delay on manual release

The factory default setting for this is for the manual release to have a delay time the same as the pre-release delay.

DELAY ON
MANUAL RELEASE

To change to have no delay when a manual release is operated, open the *Display Window* and slide the *Write Enable* switch to the left. Press the *Enter* button on the extinguishant module then press the "+" button until the display shows:

NO DELAY ON
MANUAL RELEASE ?

Press the *Enter* button and the display will show. To change press *Enter*.

To save, slide the *Write Enable* switch to the right. Operation of a manual release will now operate the extinguishant outputs immediately with no delay.

10.3.12. Pre-Release Delay – Reset/Disable

Once activated, an extinguishant module cannot be reset until after the reset inhibit time has expired and the extinguishant release timer has expired. It is possible to configure the module such that it can be reset during the pre-release delay.

Open the *Display Window* and slide the *Write Enable* switch, on the module to be configured, gently to the left. Press the *Enter* button on the extinguishant module then press the "+" button until the display shows:

PRE-RELEASE DELAY
RESET DISABLED

Press the *Enter* button to change press *Enter*.

To save, slide the *Write Enable* switch to the right. It will now be possible to reset the module during the pre-release delay but not while the extinguishant outputs have operated until after the expiry on the reset inhibit time.

PRE-RELEASE DELAY
RESET ENABLED

Note: Disabling the Pre-release delay reset may not comply with the requirements of Australian Standards.

10.3.13. Release timer (infinite extinguishant duration)

The release timer can be disabled such that once the extinguishant outputs have operated; they remain operated until the system is reset.

To disable, open the *Display Window* and slide the *Write Enable* switch on the module to be configured gently to the left. Press the *Enter* button then press the "-" button until the display shows:

RELEASE TIMER
ENABLED

RELEASE TIMER
DISABLED ?

Press the *Enter* button to change to this. To save, slide the *Write Enable* switch to the right. With the release timer disabled, the extinguishant outputs will remain operated until the system is reset.

10.3.14. R0V Removed on System Reset

This setting is generally not required to be changed, and should be left as factory default.

10.3.15. Earth Fault Monitoring – Enable/Disable

The factory default setting is for the earth fault monitoring facility to be enabled.

To disable the earth fault monitoring, open the *Display Window* and slide the *Write Enable* switch to the left. Press the *Enter* button on the extinguishant module then press the "-" button until the display shows:

EARTH FAULT
ENABLED

Press the *Enter* button to change to this. To save the settings, slide the *Write Enable* switch to the right.

EARTH FAULT
DISABLED ?

Once disabled, the Aux 24V output will be removed for a few seconds when the reset button is pressed.

10.3.16. Fault Output – Enable/Disable

The factory default setting is for the fault output relay to be enabled.

FAULT OUTPUT
ENABLED

Open the *Display Window* and slide the *Write Enable* switch to the left. Press the *Enter* button then press the "-" button until the display shows:

Press the *Enter* button to change. To save, slide the *Write Enable* switch. The fault output relay on the module will now be disabled.

FAULT OUTPUT
DISABLED ?

Note: Disabling the fault output does not comply with the requirements of AS7240-2.

10.3.17. Low Pressure Switch – Normal/Invert

To enable low pressure switches to be used which have normally closed rather than normally open contacts, it is possible to invert the input. The default setting is for the low pressure switch input to use a normally open contact.

To invert the low pressure switch input, open the *Display Window* and slide the *Write Enable* switch to the left. Press the *Enter* button on the extinguishant module then press the "-" button until the display shows:

LOW PRESS I/P
MODE = NORMAL

Press the *Enter* button to change to this.

LOW PRESS. I/P
MODE = INVERTED ?

To save, slide the *Write Enable* switch to the right. The low pressure switch input will now require a normally closed contact via a 470R trigger resistor and 6K8 end of line resistor for correct supervision.

10.3.18. Release Pressure Switch – Normal/Invert

To enable released pressure switches to be used which have normally closed rather than normally open contacts, it is possible to invert the released pressure switch input. The factory default setting is for the pressure switch input to use a normally open contact.

To invert, open the *Display Window* and slide the *Write Enable* switch to the left. Press the *Enter* button on the extinguishant module then press the "-" button until the display shows:

RELEASED INPUT
MODE = NORMAL

Press the *Enter* button to change to this.

RELEASED INPUT
MODE – INVERTED ?

The released pressure switch input needs to be disconnected to bring it into fault before changing from Normal to Inverted or back in order to prevent the input from activating.

To save, slide the *Write Enable* switch to the right. The released pressure switch input will now require a normally closed contact via a 470R trigger resistor and 6K8 end of line resistor for correct supervision.

10.3.19. Extinguishant output monitoring levels

The extinguishant outputs are able to monitor both solenoid and igniting actuator releasing devices. This requires that the outputs be calibrated with the releasing device and the cable to it, fitted as it will be in the working system.

The extinguishant outputs are normally fitted with a 1N4004 diode at the factory and the default monitoring level will be set at approximately 206 but may be between 204 and 208.

If the parameters of the extinguishant change e.g. by replacing an actuator, then the extinguishant output monitoring level will need to be "learned".

Before calibrating the extinguishant outputs ensure that the releasing device are fitted

To calibrating, enable access level 2 and slide the *Write Enable* switch to the left.

ACCESS LEVEL 2
Enter for MENU

Press the *Enter* button on the extinguishant module then press the "+" button until the display shows:

EXTING. O/P 1
LEVEL = XXX ?

The XXX here will be the actual monitoring level read by the module. To save this setting press the *Enter* button.

To set the monitoring level for extinguishant output 1, Press Enter button accept the monitoring level.

Press the *Enter* button and the display will show:

EXTING. O/P 2
LEVEL = XXX ?

The XXX here will be the actual monitoring level read by the module. To save this setting press the *Enter* button.

To save, slide the Write Enable switch to the right.

NOTE: Value of 255 means that the output is OPEN CIRCUIT. This must be corrected and the circuit re-calibrated.

11. Panel operation – Access levels 1 and 2

11.1. Normal condition

Under normal conditions and with all modules in Manual & Auto mode, control panels will have only the green, *Power On* LED lit on the Sigma XT detection part and on each of the extinguishing modules.

AUTO & MANUAL

With the *display window* closed, the display on the detection part of the panel will be blank and, the LCDs on the extinguishing modules will show:

Any modules that are in Manual Only mode with have an additional, Manual Only yellow LED lit and their display will show:

MANUAL MODE

The Manual Only LED on the module or ECU/LCS which placed the system in manual mode will be flashing.

The control panel has 3 access levels.

- Access level 1 is available at all times and allows operation of the *Alarm/Fault Warning Silence* and *Lamp Test* buttons on the detection part of the panel only.
- Access level 2 is enabled after opening the display window.
- Access level 3 allows configuration options to be set on both the detection part of the panel and the extinguishant modules following operation of their *respective Write Enable* switches at access level 2 (*the display window is open*).
-

When the *display window is open* (Access level 2) the display on the detection part of the control panel will show t 1 and the LCDs on the extinguishing modules will show:

ACCESS LEVEL 2
MANUAL MODE

11.2. Alarm Module – Access level 2.

11.2.1. Test mode

It is possible to put one or more zones into Test mode. When a zone is in test mode it will self-reset after a few seconds. This enables the system to be tested without having to return to the control panel to reset between each device activation on the zone that is being tested.

To put a zone into test mode, open the *Display Window*.

The 7 segment display will show t 1

(test zone 1). To put zone 1 into test mode, press the *Enter* button on the Sigma XT detection part.

The display will now show a flashing dot next to the t 1 and the yellow Test LED will be lit.

To select further zones to put into test mode, press the *Select* button and then the *Enter* button so that the flashing dot appears next to the selected display e.g. t2.

To remove test mode from a zone, press the *Select* button to reveal any zones that have a flashing dot and then press the *Enter* button to take that zone out of test mode. Once all zones have been taken out of test mode, the yellow, *Test* LED will go off.

11.2.2. Disable zones

It is possible to disable one or more zones. When a zone is disabled it will not report fire or fault conditions. This enables the system to be worked on without false fire or fault conditions being announced.

To disable one or more zones, open the *Display Window*. The 7-segment display will show t 1 (test zone 1)

Press the *Mode* button and the display will show d 1. To disable zone 1 press the *Enter* button. The display will show d 1 and the yellow *Disablement* LED will be lit.

To select further zones to disable, press the *Select* button and then the *Enter* button so that the flashing dot appears next to the selected display e.g. d2

To remove disablements, press the *Select* button to reveal any zones that have a flashing dot next to the displayed zone number and then press the *Enter* button. Once all zones have been enabled, the yellow, Disabled LED will go off.

11.2.3. Disable sounder outputs

The sounder outputs on the detection part of the panel can be disabled if required.

To disable the panel sounder outputs, open the *Display Window*.

The 7 segment display will show t 1 (test zone 1). Press the *Mode* button until the display shows db

Press the *Enter* button. The display will now show db the yellow *Disablement* and *Sounder Fault* LEDs will be lit.

To enable the sounder outputs, press the *Mode* button while at Access level 2 and scroll with the mode button until db is displayed. Press the *Enter* button. The display will change to db and the *Sounder Fault* and *Disablement* LEDs will go OFF if there are no other disablements active on the panel.

11.2.4. Activate delays

It is possible to set delays before sounder outputs will operate (see section 10.1). Before these time delays become effective it is necessary to turn on the *Activate Delays* function.

To do this, open the *Display Window*. The 7 segment display will show t 1 (test zone 1)

Press the *Mode* button until the display shows Ad. Press the *Enter* button, the display will now show Ad and the yellow *Alarm Delay* and *Disablement* LEDs will be lit.

To switch off the delay, press the *Mode* button while at Access level 2 (*Display Window* open) and scroll with the *Mode* button until Ad is displayed. Press the *Enter* button. The display will change to Ad and the *Alarm Delay* and *Disablement* LEDs will go off if there are no other disablements active on the panel.

11.3. Extinguishant modules

11.3.1. Extinguishant System Service Isolate

An Extinguishant System Service Isolate keyswitch is provided on each risk and prevents of firing line to the extinguishant solenoid or detonator.

This minimises the chance of an accidental release of the extinguishant during testing or maintenance, thus allowing the system to be fully functionally tested.

Turning the Extinguishant System Service Isolate keyswitch clockwise will isolate the extinguishant circuit, and a fault is generated and the *Service Isolated* LED is lit.

11.3.2. Extinguishant modules – Menu Access

With the *Display Window* open, all extinguishant modules will display:

ACCESS LEVEL 2
ENTER FOR MENU

11.3.3. Extinguishant release outputs.

Extinguishant release outputs, press the "+" button on the module while at access level 2. The display will show:

DISABLE
EXTING. RELEASE ?

Press the *Enter* button to select this function. The display will show *Disabled* and the Disabled LED will be lit.

Close the *Display Window* to leave the disablement active.

ENABLE
EXTING. RELEASE ?

11.3.4. Manual release

Manual release inputs (front panel mounted and remotely connected), press the "+" button on the module while at access level 2 until the module displays:

DISABLE
MANUAL RELEASE ?

Press the *Enter* button to select this function. The LCD shows *Disabled* and the Disabled LED will be lit.

ENABLE
MANUAL RELEASE ?

Close the *Display Window* to leave the disablement active.

11.3.5. Disable Stage 1 output

To disable the First Stage relay output, press the "+" button on the module while at access level 2 until the display shows:

DISABLE
STAGE 1 OUTPUT ?

Press the *Enter* button to select this function. The display will show and the yellow *Disabled* LED will be lit.

ENABLE
STAGE 1 OUTPUT ?

Close the *Display Window* to leave the disablement active.

11.3.6. Disable Stage 2 output

To disable the Second Stage relay output, press the "+" button on the module while at access level 2 until the display shows:

DISABLE
STAGE 2 OUTPUT ?

Press the *Enter* button to select this function. The LCD will show and the yellow *Disabled* LED will be lit.

ENABLE
STAGE 2 OUTPUT ?

Close the *Display Window* to leave the disablement active.

11.3.7. Disable Released output

To disable the Released relay output, press the "+" button on the module while at access level 2 until the display shows:

DISABLE1
RELEASED OUTPUT ?

Press the *Enter* button to select this function. The LCD will show and the yellow *Disabled* LED will be lit.

ENABLE
RELEASED OUTPUT ?

Close the *Display Window* to leave the disablement active

11.3.8. Extract output

To disable Extract relay output, press the "+" button on the module while at access level 2 until the display shows:

DISABLE
EXTRACT OUTPUT ?

Press the *Enter* button to select this function. The LCD will show and the yellow *Disabled* LED will be lit.

ENABLE
EXTRACT OUTPUT ?

Close the *Display Window* to leave the disablement active.

To turn on the extract relay output, press the "-" button on the module while at access level 2 until the display shows:

TURN ON
EXTRACT OUTPUT ?

Press *Enter* to turn ON the *Extract* output. The display will show. Pressing *Enter* again will turn OFF the *Extract* output

TURN OFF
EXTRACT OUTPUT ?

Close the *Display Window* to leave the Extract output active Note: the extract output does not turn off when the module is reset.

11.3.9. Select Reserve Solenoid Output (Configuration Option)

If the extinguishing module is configured for Main/Reserve solenoid operation (See section 15.2.1) then an additional menu option is given to select which output is used.

SELECT RESERVE
EXTING. OUTPUT

To turn on the Reserve Solenoid output, press the "+" button on the module while at access level 2 until the display shows:

SELECT MAIN
EXTING. OUTPUT ?

Press the *Enter* button to select this function. The display will show:
The yellow *Reserve Cylinders* LED indicator on the module will be lit.

Note: This menu option is not shown if the panel is configured to Common Solenoid mode.

11.4. Single zone Fire condition

Upon receipt of a fire condition by activation of a detector or call point, the *Common Fire* indicator on the detection section will light, the fire buzzer will sound and the zonal *Fire* indicator(s) will flash at around 2Hz.

The fire and local fire relays will also operate and signal any systems to which they are connected.
Any sounders connected to the sounder circuits S1 & S2 on the detection section will operate. These sounders may be silenced by operation of the silence alarm button with the enable keyswitch operated such that the panel is at access level 2.

If the zone that has activated is contributing to the extinguishant release sequence on an extinguishant module and the module is configured for coincidence activation, the *Activated* LED on the module will flash, the *First Stage* relay contact will operate, the *First Stage* sounder output will operate and the display will show:

PREACTIVATED

Pressing the *Silence Alarm* button on the detection section will turn off the sounder outputs on the detection section and the *First Stage Alarm* outputs on the extinguishant module.

11.5. Double zone Fire condition

Upon receipt of a second fire condition that contributes to extinguishant release on modules that are switched to Automatic and Manual mode with their Lock Off inputs not active and the Disable Extinguishant function has not been invoked, the detection section will respond as above and extinguishant modules will respond as listed below:

a) The second stage alarm output will operate. (Sounder circuit S3)
b) The Second stage contact will operate.
c) The Activated indicator will operate
d) The display will indicate ACTIVATED and show the time remaining until release in seconds.
e) The extinguishant output will operate after the configured delay time and for the configured duration.
f) The display will show ACTIVATED DISCHARGING for the duration of the release time.

When detection zones have activated and the activated condition is reached (i.e. the *Activated* indicator is lit) it shall not be possible to reset the extinguishant section of the panel until the Reset Inhibit timer has elapsed.

11.6. Silence/sound alarms

The *Silence/Sound alarm* button can only be operated at access level 2. (*Enable Control* keyswitch operated).

To silence the sounders, insert the Enable Control key, turn to the right and press the *Silence/Sound alarm* button. When the sounders have been silenced, the Zone Fire LEDs will change from flashing to a steady state.

Pressing the *Silence/Sound alarm* button whilst the control panel is in this silenced condition will cause the sounders to operate again.

The sounders can be toggled on and off with the *Silence/Sound alarm* button as required.

11.7. Reset

To reset the panel, operate the *Enable Control* keyswitch, then press the *Reset* button.

The extinguishant section will reset only after the Reset Inhibit timer has expired once the activated condition has been established.

11.8. Detection Zone fault

Removal of a detector from its base or a fault on any of the zone wiring will cause the *Fault* LED and *Zone Fault* LEDs to flash, indicating the zone in which the fault has occurred.

11.9. Sounder fault

A fault on the wiring to the detection section sounder circuits will cause the Fault LED to light and the Sounder Fault LED to flash.

A fault on the sounder circuits of extinguishant modules *(alarm devices as required by AS7240-1)* will light the Fault LED on the detection section and on the extinguishant module.

The extinguishant module will display:

STAGE 1 ALARMS
FAULT

or

STAGE 2 ALARMS
FAULT

11.10. Other Faults

POWER - Failure of the mains power or disconnection of the standby battery will cause the *Fault* and *Power Fault* LEDs to light on the detection section indicating an abnormality in the power supply to the control panel. There will be no indication of this condition on the extinguishant modules. Power fault is non-latching and will automatically reset once the fault has been rectified.

SYSTEM FAULT – DETECTION MODULE - The System Fault and general fault LEDs will light if the configuration memory has not been set or has become corrupted. System fault is non-latching and will automatically reset once the configuration has been rectified.

SYSTEM FAULT – EXTINGUISING MODULE - The System Fault and general fault LEDs will light if the configuration memory has not been set or has become corrupted. System fault is non-latching and will automatically reset once the configuration has been rectified.

GENERAL FAULT - The General fault LED will be illuminate under any fault condition. This LED will also light if the *Write Enable* switch has been left on and the *system is in Access Level 1.*

CONFIG WP FAULT – EXTINGUISHING MODULE - The *Write Enable* switch on the Extinguishant Module has been left in the access level 3 position and the *system is in Access Level 1.*

11.11. Lamp test

All LED indicators on the panel can be tested at any time by pressing the *Lamp Test* button on the Detection part. Indicators on individual extinguishant modules can be lamp tested by holding down the *Exit* button for more than 2 seconds.

11.12. Lock Off condition

Activation of the Lock Off input or a fault on the monitored wiring of the Lock Off circuit on a module or at a remotely mounted status unit will cause the Lock Off Activated indicator to light on the module and on any status units or ancillary boards connected to it.

If the extinguishant module is in the Activated condition and the pre-release timer is running then the extinguishant release sequence will be halted and the pulsing, Second stage sounders shall change to 1 second on, 2 seconds off.

Release of the Lock Off input will re-start the pre-release timer from maximum.

11.13. Released condition

The released pressure switch input will be connected to a pressure switch mounted on the extinguishant cylinder which operates when the extinguishant has been released. This will activate the released indicator on the control panel.

If the extinguishant has been released by mechanical means i.e. the control panel is not in the activated condition, operation of the released pressure switch input will establish the Released condition. (See also 15.2.8)

11.14. Low pressure switch

The low pressure switch input will be connected to a pressure switch on the extinguishant cylinder which will operate if the pressure in the cylinder falls below a set point.

This will happen after the extinguishant has been released but may happen before release through a leak. The fault LED on the module and on the detection part will light and the buzzer will sound when this input is operated.

11.15. Manual only mode

The mode of the system can be toggled between Manual Only and Automatic & Manual by operating the Mode Select pushbutton on the modules.

The safety cap must be lifted upwards before the pushbutton can be operated.

When a module is in Manual Only mode, the extinguishant cannot be released by the operation of automatic detectors.

The mode can also be changed to manual by the external mode select input or a Mode Select pushbutton on a status unit. Any mode select input that is switched to Manual only mode will override any modules switched to Automatic and Manual mode. All inputs must be switched to Manual and Automatic mode for a module to be in Automatic and Manual mode.

11.16. Manual Release

Extinguishant modules may be activated by Manual release inputs via the manual release control on the front of each module, a remotely mounted Manual release control connected the monitored manual release inputs or by a manual release control mounted on a status unit.

Activation of any of these Manual release controls will immediately activate the extinguishant module and begin the pre-release timer if the module is configured to have a time delay for Manual release inputs.

11.17. Abort input

Each module has the facility for connection of an Abort control. Operation of the Abort input or a fault on the monitored wiring of the Abort circuit during the pre-release delay time or before activation will light the Abort indicator on the module and the extinguishant release timer will be cancelled i.e. the extinguishant will not be released. The module can be immediately reset from this condition.

12. Internal Controls

12.1. Fire Alarm Module

12.1.1. Watchdog reset

If for any reason the microprocessor in the Fire Alarm Module of the control panel fails to carry out its operation correctly it will attempt to restart. This process is called a "watchdog" and the control panel must record and indicate these events.

If a watchdog event occurs, the fire alarm module will show the Fault and System Fault LEDs on the front panel, the CPU fault LED inside the panel will light and the buzzer will sound. This fault can only be cleared by pressing the Watchdog Reset button on the PCB inside the control panel. The control panel buzzer will continue to sound until the watchdog activation is reset.

12.1.2. Processor reset

Once started, the microprocessor controlling the fire alarm module of the panel should continue to run continuously without interruption. If the microprocessor fails to run correctly it can be reset by pressing the Processor Reset button on the PCB inside the control panel.

This should not normally be necessary but should be done as a matter of course if the system is behaving abnormally. The system should resume normal operation within a couple of seconds of pressing the processor reset button. It will be necessary to press the Watchdog Reset button a few seconds after pressing the Processor Reset button to clear the Watchdog indication and buzzer.

12.1.3. Write enable switch

To protect the configuration memory of the panel while it is running normally the *Write Enable* switch is provided.

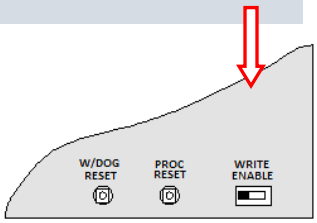

The memory *Write Enable* switch must be switched on before any changes can be made to the configuration. The *Write Enable* switch is quite fragile and should be operated with care.

12.2. Extinguishant Module

12.2.1. Watchdog reset

If the microprocessor on an extinguishant module fails to carry out its operation correctly it will attempt to restart.

If a watchdog event occurs, the Extinguishant module will show *Fault* and *System Fault* LEDs on the front panel, the detection part of the panel will show a fault and the buzzer will sound and the display on the Extinguishant module will show CPU fault.

This fault can only be cleared by pressing the Watchdog Reset button on the Extinguishant module. The control panel buzzer will continue to sound until the watchdog activation is reset.

12.2.2. Processor reset

If the microprocessor on an Extinguishant module fails to run correctly it can be reset by pressing the Processor Reset button on the PCB inside the control panel.

This should not normally be necessary but should be done as a matter of course if the system is behaving abnormally. The system should resume normal operation within a couple of seconds of pressing the processor reset button.

12.2.3. Terminate extinguishant

Once the extinguishant outputs have been operated they cannot be switched off until after the reset inhibit timer has elapsed. For test purposes a terminate extinguishant button is provided which will terminate operation of the extinguishant outputs and allow the system to be reset.

12.2.4. Address switch

Extinguishant modules are connected to the serial bus of the Sigma XT detection part of the control panel and each module must be allocated an address between 1 and 7 using the binary coded DIP switch.

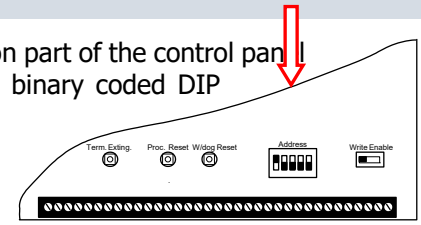

13. Watchdog reset switch

If for any reason the microprocessor in the control panel fails to carry out its operation correctly it will attempt to restart itself. This process is called a "watchdog" and the control panel must record and indicate these events.

If a watchdog event occurs, the control panel will show the *Fault* and *System Fault* LEDs on the front panel, the *CPU Fault* LED inside the panel.

This fault can only be cleared by pressing the *Watchdog Reset* button on the PCB inside the control panel. The control panel buzzer cannot be silenced and will continue to sound until the watchdog activation is reset.

14. Processor reset switch

Once started, the microprocessor controlling the panel should continue to run continuously without interruption. If the microprocessor fails to run correctly it can be reset by pressing the *Processor Reset* button on the PCB inside the control panel.

This should not normally be necessary but should be done as a matter of course if the system is behaving abnormally. The system should resume normal operation within a couple of seconds of pressing the *Processor Reset* button. Note: A *Watchdog Reset* should always be performed following a *Processor Reset*.

15. Internal indications – troubleshooting

15.1. Indicators – Detection and Alarm Panel

MAINS FAIL - Indicates that the 230V AC supply is not present and the system is running on standby batteries. If there is not a power cut, check the panels mains fuse.

BATT FAIL - Indicates that the standby battery has become disconnected or that the charging circuit of the control panel has a high resistance or has failed. Check that both batteries are connected and linked together. Test the battery. Disconnect the battery and ensure that 28 Volts can be measured on battery charger leads.

CPU FAULT - Indicates that the central processor unit has failed to correctly execute code and has been re-started by the system watchdog. The *Watchdog Reset* switch must be pressed to clear the *CPU Fault* condition. If system does not return to normal after the *Watchdog Reset* switch is pressed then the panel is probably damaged and the circuit board needs replacing.

AUX 24V FAULT - The Aux 24V and R0V terminals provide a 500 milliamp, 24V DC power supply for power fire alarm ancillary equipment. This LED indicates that fuse protecting the R0V output has operated and the rating of this output has been exceeded. The fuse is a self-resetting type and the supply will resume when the fault condition is removed.

BATT LOW - Illuminates when the system is running on batteries and the battery voltage is lower than 21V +/- 2% (the minimum battery voltage).

COMMS FAULT - Indicates that communication has been lost with an extinguishant module, repeater panel or ancillary board. Check for comms fault at all extinguishant modules, repeaters and ancillary boards to identify the source of the problem.

EARTH FAULT - Indicates that part of the system wiring is connected to earth. Remove all system wiring and re-connect cables one at a time until the earth fault returns. This will indicate which cable the earth fault is present on.

SYS FUSE FAULT - Indicates that the total power rating of the power supply has been exceeded and that the system fuse has come into operation. Remove and review all loads and re-connect one at a time until over rated circuit trips fuse to identify troublesome circuit.

S1 FAULT and S2 FAULT - Indicates a short or open circuit on sounder outputs. Remove wiring and refit end of line resistors. Check sounder circuit wiring.

15.2. Indicators - Extinguishant modules

WATCHDOG - Indicates that the processor has failed to correctly execute code and has been re-started by the watchdog circuit. The watchdog reset switch must be pressed to clear the Watchdog fault condition.

Press the Watchdog reset button. If system does not return to normal, then the module is probably damaged and needs the circuit board replacing.

SYSTEM FUSE - Indicates that the modules main fuse has been overloaded and the module is shut down. Remove and review all loads then re-connect one at a time.

MAN. RELEASE - Indicates that either the front panel mounted or a remotely connected Manual release control has been operated. This indication can only be cleared by power cycling the module or pressing the processor reset switch.

REMOTE BUS FAULT (on display) - Indicates that one or more devices on the remote serial bus is not responding either through a disconnection or failure. Any disconnected status unit will have all indicators and LED displays flashing 88. Any disconnected ancillary board will have its COMMS LED illuminated.

First place to check are the warning signs and LCS modules. Make sure that addresses are different, and that status cabling is correct.

OUTPUT UNIT FAULT (on display) - On panel initialisation after power up or a processor reset indicates that a warning sign or ancillary board has been added or removed from the communications bus. During normal operation indicates that a warning sign or ancillary board has had a processor failure.

STATUS UNIT FAULT (on display) - On panel initialisation after power up or a processor reset indicates that a status unit has been added or removed from the communications bus. During normal operation indicates that a status unit has had a processor failure.

16. Power supply

The control panel requires a 230V (+10%/-15%), 50/60Hz, AC mains power supply which connects to the fused terminal block labelled "230V".

Panels with a 3A power supply have a 20mm, F1.6A L250V mains fuse.

Panels with a 5A power supply have a 20mm T2A L250V mains fuse.

These fuses should only be replaced with fuses of the same or similar types.

This table shows the power supply rating and recommended battery capacity for each model in the Sigma XT range.

Model	Description	Power supply rating (Including Battery Charge)	Batteries for 24 hr standby (Max battery size)
SIGMA-x-M3-ECU	**Single Extinguishing area in a M3 enclosure**	**3A (0.8A)**	**7Ah (9.2 Ah)**
SIGMA-x-D3-ECU	**Single Extinguishing area in a D3 enclosure**	**5.25A (1.25A)**	**9 Ah (24 Ah*)**
SIGMA-x-D4-ECU	**Single Extinguishing area in a D4 enclosure**	**5.25A (1.25A)**	**9 Ah (24 Ah*)**

where x = number of conventional zones

** indicates supplier dependent sizing*

The maximum loading on the power supply must be carefully considered when connecting externally powered equipment such as sounders and solenoids.

Exceeding the maximum power supply rating may cause a fuse or other protective device to operate and render the equipment inoperative until the fuse is replaced or protective devices are reset.

The table below can be used to calculate the loading for all models by adding the loads in the second column.

Current in milliamps	**Quiescent Current**	**Alarm Current**
Detection section max alarm load	**100 mA**	**550 mA**
Extinguishing module max alarm load	**105 mA**	**105 mA**
Detection section total sounder load (S1&S2)		
Detection section Aux 24V supply		
Extinguishant module total sounder load		
Extinguishant module extinguishant output load		
Extinguishant module Aux 24V supply		
Warning signs @ 130mA (without buzzer)		
Warning signs @ 145mA (with buzzer)		
Status indicators @ 33mA		
TOTAL LOAD **(must be less than 2.2A or 4A depending on the PSU)**		

The output voltage of the power supply is between 18 and 30V depending on mains and battery condition and the total current rating is either 3A or 4A depending on the model (see tables above).

The incoming mains cable should be routed away from other lower voltage wiring by a distance of at least 50mm.

Mains wiring MUST include an earth conductor, which is securely bonded to the building earth and should enter the enclosure as close as possible to the mains terminal block. Mains wires should be kept very short inside the enclosure and secured together close to the mains terminal block with a cable tie.

Maximum capacity batteries are 9Ah for Sigma–X-M3 models and 24Ah for Sigma-X-D3 or Sigma-X-D4 models.

Maximum current drawn from the batteries when the main power source is disconnected is 3 Amps.

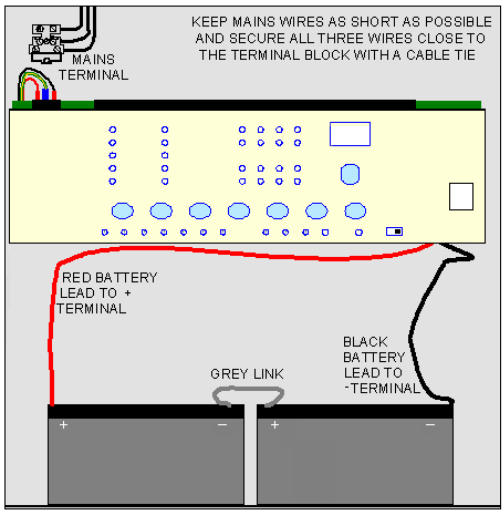

When the batteries are discharged to a level at which a low battery indication is given, the *Batt Fail* indicator will also be lit.

WRONGLY CONNECTED BATTERIES COULD CAUSE DAMAGE TO THE CONTROL PANEL.

Battery leads are supplied wired to the power supply along with a link to connect the two batteries together.

It is most important that the polarity of the batteries is carefully observed when connecting.

The panels have a **temperature compensation sensor** held in place on the power supply chassis with adhesive tape. The tip of the sensor must be fitted to one of the batteries with the tape supplied for correct temperature compensation.

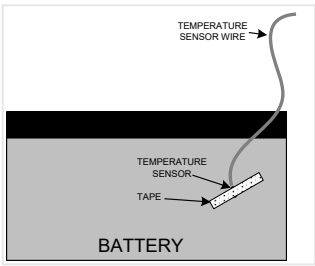

17. Maintenance

Sigma XT control panels do not require any specific maintenance but should the control panel become dirty it can be wiped over with a damp cloth and should then be dried with a dry, lint free cloth. Detergents or solvents should not be used to clean the panel and care must be taken that water does not *Enter* the enclosure.

The control panel contains sealed lead acid batteries to provide standby power in the event of a mains failure.

These batteries have a life expectancy of around 2 years. It is recommended that these batteries be tested in accordance with the battery manufacturer's recommendations annually to determine their suitability for continued standby applications.

Testing of the extinguishant system should only be carried out by trained personnel and must be done with appropriate isolation measures in place to ensure that accidental discharge of the extinguishant agent is avoided and any malfunction should be reported to the fire alarm maintenance company immediately.

Should the control panel become faulty the complete electronic assembly can be replaced.

To do this, any configured options should be noted then both mains and battery power should be removed before the work is started.

The field wiring should be carefully labelled and removed from the terminals.

The faulty PCB can now be taken out of the panel by removing the screw and hinge pins holding the plate in position.

Fitting the new PCB is the reverse of the procedure for removing the board.

18. Zone designation label

All Sigma XT control panels are supplied with a zone designation label onto which zone designations can be written.

This enables each zone to be given a text description allowing easier identification of any zones showing an abnormal condition. The placement of this label is at the user's discretion.

19. Commissioning instructions and Record of Configuration

Before applying power to the panel, any solenoids or igniting actuators must be physically isolated from the system by disconnecting both wires to it. This will prevent any accidental release of extinguishant.

When power is applied, if all connections are correct, only the green Power On and either the Automatic and Manual or Manual Only indicators should be lit. If any fault indicators are lit the wiring to the appropriate input or output should be checked and all faults have been cleared before proceeding.

Once the panel is fault free, it can be configured with the desired options as described in section 15.

Once the panel has been configured the system should be thoroughly tested to ensure that the control panel responds as expected and required.

After satisfactory testing, any final connections should be made (such as to the extinguishant release actuator).

Use the Table below to record the configuration codes that have been set on the control panel for future reference. Place a tick in the "SET" column for any configuration options that are set. It is recommended that a copy of this Table is left with the control panel under the supervision of the person responsible for the fire detection system.

CODE	FUNCTION	COMMENTS	SET
00	SOUNDER DELAY TIME = 30 SECONDS	Sets the time delay before sounders operate in combination with configuration codes 31 to 48 and access level 2 function AD.	
01	SOUNDER DELAY TIME = 1 MINUTE		
02	SOUNDER DELAY TIME = 2 MINUTES		
03	SOUNDER DELAY TIME = 3 MINUTES		
04	SOUNDER DELAY TIME = 4 MINUTES		
05	SOUNDER DELAY TIME = 5 MINUTES		
06	SOUNDER DELAY TIME = 6 MINUTES		
07	SOUNDER DELAY TIME = 7 MINUTES		
08	SOUNDER DELAY TIME = 8 MINUTES		
09	SOUNDER DELAY TIME = 9 MINUTES		
10	COMMON ALARM MODE	All sounders operate upon any fire condition	
11	TWO-STAGE ALARM MODE	Continuous sounders in activated zone, pulsing elsewhere	
12	ZONED ALARM MODE	Only sounders connected to zone in alarm operate	
21*	DISABLE FIRE BUZZER	Buzzer will not operate on fire condition	
22*	DISABLE FAULT OUTPUT	Fault relay will not operate except upon total power failure	
23	DISABLE EARTH FAULT MONITORING		
24	PULSED REMOTE CONTROL OUTPUT	Aux 24V supply pulses 1 sec on/1 sec off	
25	ENABLE SOUNDERS ON DETECTION CIRCUITS	Set as default if panel is two wire “T” series (detectors and call points on same cables)	
26	DISABLE FIRE OUTPUT	Fire relay will not operate upon any alarm	
27	DO NOT CHANGE		
28	INDICATE CALL POINT ACTIVATION	Activation of a call point with a 270R resistance fitted is indicated by a flashing zone indicator and “Pu” on the 7 segment display. Activation of a detector will be indicated by a steady zone indicator and nothing on the 7 segment display	
29	DO NOT RE-SOUND ALARMS FROM ANOTHER ZONE	Silenced sounders will not re-sound upon further zone activations	
31	ZONE 1 ALARM FROM DETECTOR DELAYED	Sounder outputs will be delayed by time set at options 0-9 when selected zone(s) triggered by detector only. Note access level 2 function Ad must be set for this to take effect.	
32	ZONE 2 ALARM FROM DETECTOR DELAYED		
33	ZONE 3 ALARM FROM DETECTOR DELAYED		
34	ZONE 4 ALARM FROM DETECTOR DELAYED		
35	ZONE 5 ALARM FROM DETECTOR DELAYED		
36	ZONE 6 ALARM FROM DETECTOR DELAYED		
37	ZONE 7 ALARM FROM DETECTOR DELAYED		
38	ZONE 8 ALARM FROM DETECTOR DELAYED		
41	ZONE 1 ALARM FROM CALL POINT DELAYED	Sounder outputs will be delayed by time set at options 0-9 when selected zone(s) triggered by call point only. Note access level 2 function Ad must be set for this to take effect.	
42	ZONE 2 ALARM FROM CALL POINT DELAYED		
43	ZONE 3 ALARM FROM CALL POINT DELAYED		
44	ZONE 4 ALARM FROM CALL POINT DELAYED		
45	ZONE 5 ALARM FROM CALL POINT DELAYED		
46	ZONE 6 ALARM FROM CALL POINT DELAYED		
47	ZONE 7 ALARM FROM CALL POINT DELAYED		
48	ZONE 8 ALARM FROM CALL POINT DELAYED		
51	COINCIDENCE ZONE 1		
52	COINCIDENCE ZONE 2		

53	COINCIDENCE ZONE 3	Zone contributes to ancillary board coincidence O/P. Any number of zones can be selected to contribute.	
54	COINCIDENCE ZONE 4		
55	COINCIDENCE ZONE 5		
56	COINCIDENCE ZONE 6		
57	COINCIDENCE ZONE 7		
58	COINCIDENCE ZONE 8		
61	CONFIGURE Z1 FOR I.S BARRIER	Detection threshold changed for use with IS barrier	
62	CONFIGURE Z2 FOR I.S BARRIER		
63	CONFIGURE Z3 FOR I.S BARRIER		
64	CONFIGURE Z4 FOR I.S BARRIER		
65	CONFIGURE Z5 FOR I.S BARRIER		
66	CONFIGURE Z6 FOR I.S BARRIER		
67	CONFIGURE Z7 FOR I.S BARRIER		
68	CONFIGURE Z8 FOR I.S BARRIER		
71*	ZONE 1 SHORT CIRCUIT INDICATES ALARM	Changes the trigger threshold of the zone so that the control panel can be used on older systems that had no short circuit monitoring.	
72*	ZONE 2 SHORT CIRCUIT INDICATES ALARM		
73*	ZONE 3 SHORT CIRCUIT INDICATES ALARM		
74*	ZONE 4 SHORT CIRCUIT INDICATES ALARM		
75*	ZONE 5 SHORT CIRCUIT INDICATES ALARM		
76*	ZONE 6 SHORT CIRCUIT INDICATES ALARM		
77*	ZONE 7 SHORT CIRCUIT INDICATES ALARM		
78*	ZONE 8 SHORT CIRCUIT INDICATES ALARM		
81*	ZONE 1 NON-LATCHING	Renders the zone self-resetting so that it can be used to receive signals from other systems and will reset when the input is removed. Note: It can take up to 20 seconds for zone to reset itself when sounders are operating	
82*	ZONE 2 NON-LATCHING		
83*	ZONE 3 NON-LATCHING		
84*	ZONE 4 NON-LATCHING		
85*	ZONE 5 NON-LATCHING		
86*	ZONE 6 NON-LATCHING		
87*	ZONE 7 NON-LATCHING		
88*	ZONE 8 NON-LATCHING		
91	ZONE 1 DOES NOT SOUND ALARMS	Prevents the zone from operating the two common sounder outputs	
92	ZONE 2 DOES NOT SOUND ALARMS		
93	ZONE 3 DOES NOT SOUND ALARMS		
94	ZONE 4 DOES NOT SOUND ALARMS		
95	ZONE 5 DOES NOT SOUND ALARMS		
96	ZONE 6 DOES NOT SOUND ALARMS		
97	ZONE 7 DOES NOT SOUND ALARMS		
98	ZONE 8 DOES NOT SOUND ALARMS		
A1*	ZONE 1 ANY ALARM DELAYED	Zone needs to be triggered for 30 seconds continuously before an alarm is generated.	
A2*	ZONE 2 ANY ALARM DELAYED		
A3*	ZONE 3 ANY ALARM DELAYED		
A4*	ZONE 4 ANY ALARM DELAYED		
A5*	ZONE 5 ANY ALARM DELAYED		
A6*	ZONE 6 ANY ALARM DELAYED		
A7*	ZONE 7 ANY ALARM DELAYED		
A8*	ZONE 8 ANY ALARM DELAYED		

C1	ZONE 1 SOUNDERS INHIBITED	Enables individual zones to be configured not to operate zonal sounders. On 2 wire "T" series panels this enables individual zones to be configured for use with conventional (non-savwire) detector bases.	
C2	ZONE 2 SOUNDERS INHIBITED		
C3	ZONE 3 SOUNDERS INHIBITED		
C4	ZONE 4 SOUNDERS INHIBITED		
C5	ZONE 5 SOUNDERS INHIBITED		
C6	ZONE 6 SOUNDERS INHIBITED		
C7	ZONE 7 SOUNDERS INHIBITED		
C8	ZONE 8 SOUNDERS INHIBITED		
E1*	ZONE 1 WILL NOT OPERATE FIRE RELAY	Enables individual zones to be selected to not operate the fire relay. This is sometimes combined with the non-latching function to prevent ring around on interconnected panels.	
E2*	ZONE 2 WILL NOT OPERATE FIRE RELAY		
E3*	ZONE 3 WILL NOT OPERATE FIRE RELAY		
E4*	ZONE 4 WILL NOT OPERATE FIRE RELAY		
E5*	ZONE 5 WILL NOT OPERATE FIRE RELAY		
E6*	ZONE 6 WILL NOT OPERATE FIRE RELAY		
E7*	ZONE 7 WILL NOT OPERATE FIRE RELAY		
E8*	ZONE 8 WILL NOT OPERATE FIRE RELAY		

NOTE: Setting the options marked with asterisks does not comply with AS7240-2

Extinguishant Module

CONFIGURATION OPTION	**Exting. Module 1**	**Exting. Module 2**
EXTINGUISHANT OUTPUT MODE =		
ACTIVTION MODE =		
FIRST ACTIV. ZONE =		
LAST ACTIV. ZONE =		
RESET INHIBIT TIME =		
PRE-REL.DELAY TIME =		
EXTING. RELEASE TIME =		
PULSED ACTIV. ALARMS ?		
STEADY ACTIV. ALARMS ?		
RELEASED IND. ON RELEASED INPUT ?		
RELEASED IND. ON EXTING RELEASE ?		
DELAY ON MANUAL RELEASE ?		
PRE-REL DELAY RESET Enabled / Disabled		
RELEASE TIMER Enabled / Disabled		
EARTH FAULT ENABLED ?		
EARTH FAULT DISABLED ?		
FAULT OUTPUT ENABLED ?		
FAULT OUTPUT DISABLED ?		
LOW PRESS. I/P Normal / Inverted		
EXTING. O/P 1 LEVEL =		
EXTING. O/P 2 LEVEL =		

Notes:

incite fire

Sydney

Block Y, Unit 1, 391 Park Road, REGENTS PARK NSW 2143
Mail: PO Box 508 GYMEA NSW 2227
Phone: 1300 INCITE (1300 462 483) | 02 9644 7144
Fax: 02 9644 7255
Email: sales@incitefire.com.au
Technical support: support@incitefire.com.au

Melbourne

Address: Unit 120, 45 Gilby Road, MT WAVERLEY VIC 3149
Phone: 03 9544 2211
Fax: 03 9544 2212
Email: salesvic@incitefire.com.au

Brisbane

Address: 25 Jeays Street, BOWEN HILLS QLD 4006
Phone: 07 3252 5366
Fax: 07 3252 4099
Email: salesqld@incitefire.com.au

Perth

Address: Unit 2, 48 Irvine Drive, MALAGA WA 6090
Phone: 08 9349 2972
Email: saleswa@incitefire.com.au